FORCE FED BOILING AND CONDENSATION FOR HIGH HEAT FLUX APPLICATIONS

Edvin Cetegen [1], Serguei Dessiatoun[1], Michael M. Ohadi[2]

[1]Smart and Small Thermal Systems Laboratory
Department of Mechanical Engineering,
University of Maryland, College Park,
MD 20742, USA

[2]Academic Affairs
Department of Mechanical Engineering,
The Petroleum Institute
P.O. Box 2533
Abu Dhabi, United Arab Emirates

Abstract

This paper presents heat transfer characteristics of an innovative, self-contained two phase cooling method that utilizes force-fed boiling (FFB) and force-fed condensation (FFC) techniques over micro-structured surfaces to obtain high heat flux cooling with relatively low pressure drops. Our experiments demonstrate the substantial advantage of both force fed boiling and condensation when compared to conventional liquid cooling methods. Our results demonstrate dissipation of a heat flux of 450 W/cm^2 with a heat transfer coefficient of 300.9 kW/m2K from silicon electronics using R-245fa as the working fluid. The corresponding pressure drop is 35 kPa. The governing heat transfer mechanism appears to be predominantly nucleate boiling with some contribution from convective boiling, depending on the heat flux level. For condensation, the force-fed method produces heat transfer coefficients up to 42.4 kW/m^2-K using the working fluid, R245fa refrigerant. These two heat transfer processes have the added capability of being used together in a self-contained system.

KEYWORDS

Boiling, Condensation, Microgrooved Surface, High Heat Flux Cooling

INTRODUCTION

The continued demand for high performance electronic products and the simultaneous trend of miniaturization has raised power and/or power density requirements to unprecedented levels in electronic systems. Effective thermal management is becoming increasingly critical to the electronics industry to satisfy the increasing market demand for faster, smaller, lighter and cheaper products. The traditional methods for cooling high flux electronics are no longer responsive to the ever-increasing power density in electronics and the need to further miniaturize the size of the systems as a whole. Traditional techniques include methods such as conduction and natural/forced convection. The need for new technologies capable of dissipating high heat fluxes and requiring low input power is currently of critical importance. High heat dissipation for many applications must be combined with low weight/volume requirements, reliability, and acceptable fabrication and maintenance costs.

Microchannels, heat pipes, jet impingement and spray cooling are among the widely used available advanced cooling technologies. Each of these methods has its own advantages and disadvantages, which leave the possibility open for the introduction of competitive new technologies. Single-phase flow in microchannels is a well-known technique for thermal management processes. However, this technology is limited by the tremendous pumping power required to keep the temperature gradient in the fluid within acceptable limits. Heat pipes require no power, but their heat transfer capacity is often too small for high flux cooling applications. Jet impingement is a cooling solution that can achieve low thermal resistances with minimum thermal interface. However, the non-

uniformity of surface temperatures, its high power requirement, and the excess fluid and erosion it causes represent drawbacks that are not acceptable to certain applications. Two-phase flow boiling in microchannels yields low pumping power, high efficiency, and high heat dissipation rates. However, the issues of flow instabilities, improved predictions of local heat transfer coefficients, critical heat fluxes, and two-phase pressure drops need to be better addressed.

Agostini et al [1] compared different cooling technologies that are currently used to cool the next generation high heat flux computer chips. Their study is a compilation of experimental data published between 2003 and 2007 for liquid flow in microchannels, two-phase flow in microchannels, flow in porous media, and jet impingement. Their comparison of three technologies – single-phase microchannels, two-phase microchannels and jet impingement – with characteristic heat transfer values is given in first three columns of Table 1. As seen there, the highest heat flux achieved using non-water fluids is 93.8 W/cm^2 for two-phase microchannels (R134a) and 80.2 W/cm^2 in jet impingement (FC72). The last column represents data obtained for Force Fed Boiling which is the main focus of the work presented here.

Table 1. Comparison of current high heat flux cooling technologies

Characteristics	Single phase Microchannel [1]	Two phase Microchannel [1]	Jet impingement [1]	Force Fed Boiling
Maximum heat flux dissipated (W/cm^2)	790 (water)	275 (water) 93.8(R134a)	1820 (water)	924 (R245fa)
Pressure drop at maximum heat flux dissipated	22011 kPa/m	39 kPa/m (water) 180 kPa/m (R134a)	241 kPa	35 kPa (R245fa)
Mean heat flux dissipated at T_l=85°C (W/cm^2)	116.9–450.7 mean 305 (water)	NA	80.2(FC72) 470.8 (water)	700 (R245fa)
Heat sink thermal resistance (K·cm^2/W)	0.08–0.492 mean 0.47 (water)	0.07–2.5	0.0345–0.203	0.018-0.1 (R245fa)
Flow Rate (l/min)	0.04-1.002	0.0025–1	2.5–44.2	0.010–0.03
Pressure Drop	858 to 105987 kPa/m	0.1–196 kPa/m	26–241 kPa	5–35 kPa
Pump power/dissipated power	1.2×10^{-3} – 77.4×10^{-3}	0.2×10^{-6} – 1336×10^{-6}	3.86×10^{-2} – 3.48×10^{-4}	1.2×10^{-3} – 12×10^{-3}
Level of physical understanding	Good	Low	Low	Low

The Force Fed mechanism (FF) is a technique that has been developed in our laboratories and proven effective for both force-fed boiling and condensation, as well as single-phase cooling applications. We have demonstrated some of the possible benefits and thermal performance characteristics associated with both FFB and FFC in our previous publications [2–4]. In this paper we will present some of the most recently obtained results for force-fed boiling (FFB) on an advanced microgrooved surface with higher fin density, using a non aqueous refrigerant – R245fa. Force-fed condensation (FFC) data will also be presented for comparison purposes at a system level approach.

FORCE-FED BOILING AND CONDENSATION TECHNOLOGY

The Force Fed Technology is a process designed for achieving high heat transfer coefficients, with relatively low pressure drops, for both single-phase and two-phase heat transfer in microgrooved

surfaces. The microgrooved surfaces used in this study consisted of a thin copper surface with one face flat and the other face with alternating parallel fins and channels. For example, the surface used for FFB has microgrooves with hydraulic diameter of 28 micron, aspect ratio of 15 and a fin density of 600 fins per inch.

FFB is a combination of a microgrooved surface and an advanced system of feed channels. A typical FFE element and its cross sectional view is shown in Fig. 1.The feed channel system is placed on top of the microgrooved surface and has the function to force the working fluid into the microgrooves on the heat transfer surface. As shown in the figure, the feed channels are positioned with a 90° angle to the microgrooved surface microchannels flow direction, thus creating short microchannel passages. This configuration creates hundreds of microchannels operating in parallel to achieve very low pressure drop.

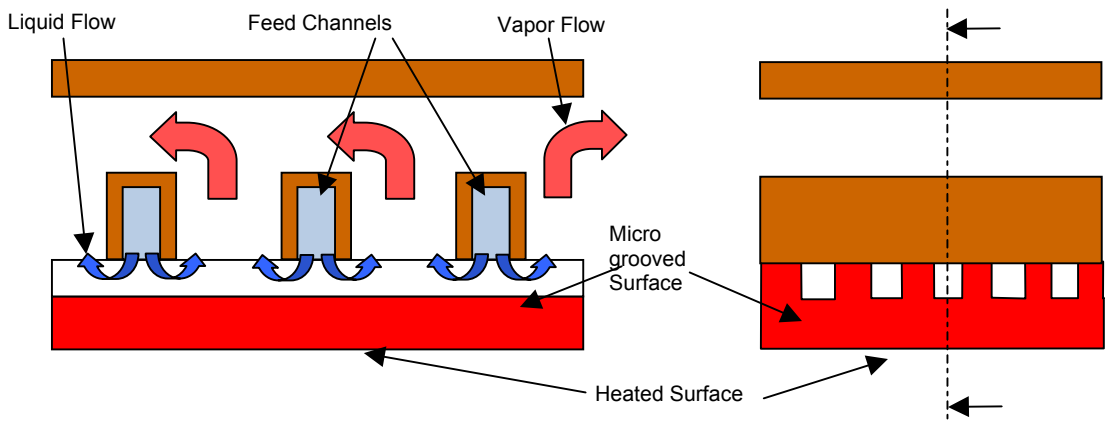

Fig. 1. The Force Fed Boiling process

Most part of the heat transfer occurs when the liquid evaporates as it passes a short distance through the microchannels. The generated vapor flows out of the microchannels before it is directed out of the area. The result is the formation of a liquid vapor flow pattern that supplies liquid working fluid beneath the escaping vapor, keeping surface wet and increasing the critical heat flux (CHF). A similar feed channel and microgrooved surface configuration was used for condensation too, but with saturated vapor directed into the microchannels. Additional details about Force Fed Boiling can be found in [2, 3].

EXPERIMENTAL SETUP AND DATA REDUCTION

The FFB experiments were conducted on a flow boiling setup schematically shown on Fig. 2. The experimental setup is equipped with heat generating and cooling facilities for operating at heat fluxes up to 2 kW/cm^2. Here, FFB was performed utilizing a microgrooved surface of 1 x 1 cm^2 footprint area with three T type thermocouples installed on the heated surface. The inlet and outlet temperatures, absolute pressure and pressure drops were also measured. A Coriolis mass flow meter was used in the loop for flow measurement, a gear pump supplied the working fluid to the header, and a chiller was used to provide cold water to the condenser. The heat transfer coefficient was calculated by eq. (1):

$$q = A_{base} h \left(T_{surface} - T_{fluid\_in} \right) \tag{1}$$

where A_{base} is the area of the cooled surface, in this case being the area of the thin film heater which has s square face with a edge dimension of 3/8". The term in the brackets represents the temperature difference between average surface temperature and fluid inlet temperature. To obtain the temperature

at the surface of the evaporator, the values of the three thermocouples were averaged. The cooling capacity q was calculated using voltage and current measurements from the power supply.

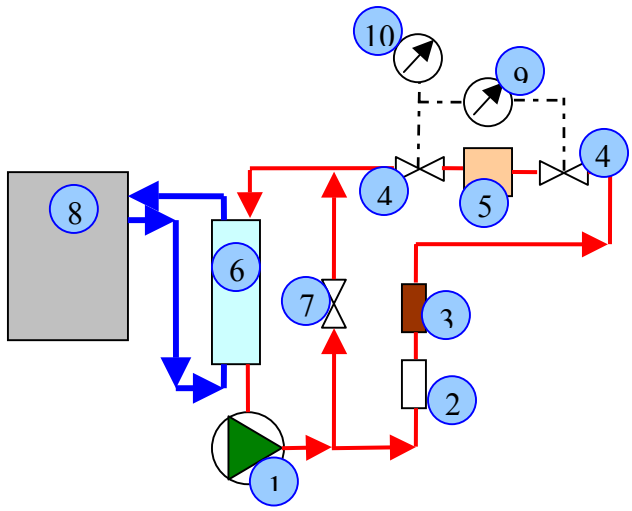

Fig. 2. Boiling setup flow diagram, (1) Gear Pump, (2) Coriolis Mass Flow Meter, (3) Filter, (4) Flow Control Valve, (5) Evaporator Test Section, (6) Condenser, (7) Bypass System Valve, (8) Chiller, (9) Differential Pressure Transducer, (10) Absolute Pressure Transducer

Similar concepts were used in calculation heat transfer coefficients for condensation as well. A sample with an area of 1×7 cm^2 was used as microgrooved surface sample and surface temperatures were measured from with five different T type thermocouples. Absolute and differential pressures were also measured at inlet and outlet of the condenser. The heat transfer coefficients were evaluated using eq. (2):

$$q = A_{base} h \left(T_{surface} - T_{saturation} \right) \tag{2}$$

Here condenser temperature values were averaged to calculate average surface temperature. The inlet and outlet qualities to the condenser were kept constant at x=1 and x=0 respectively so the saturation temperature was considered as fluid inlet temperature. Heat rejected was calculated using measured water mass flow rate and water inlet and outlet temperatures.

FFE EXPERIMENTAL RESULTS

Several sets of experiments were performed in order to investigate the performance of FFB. R245fa was selected as the working fluid. It is a non-aqueous fluid designed for low pressure refrigeration applications and has a saturation temperature of 14.9°C at atmospheric pressure [5]. Fig. 3 shows the boiling curves for different mass fluxes. At a constant mass flux, the experiments were done by increasing the heat flux and measuring temperatures. Three different mass flux levels were tested for the same FFE configuration, 580 kg/(m^2·s), 774 kg/(m^2·s) and 968 kg/(m^2·s). During experiments, the inlet static pressure was kept constant at 185 kPa, which corresponds to a saturation temperature of 30 °C, and the heat flux increment was limited by surface temperature, not to exceed 80 °C, for protecting heater assembly. It was measured that inlet subcooling varied between 1–10 °C for the entire range of data reported here.

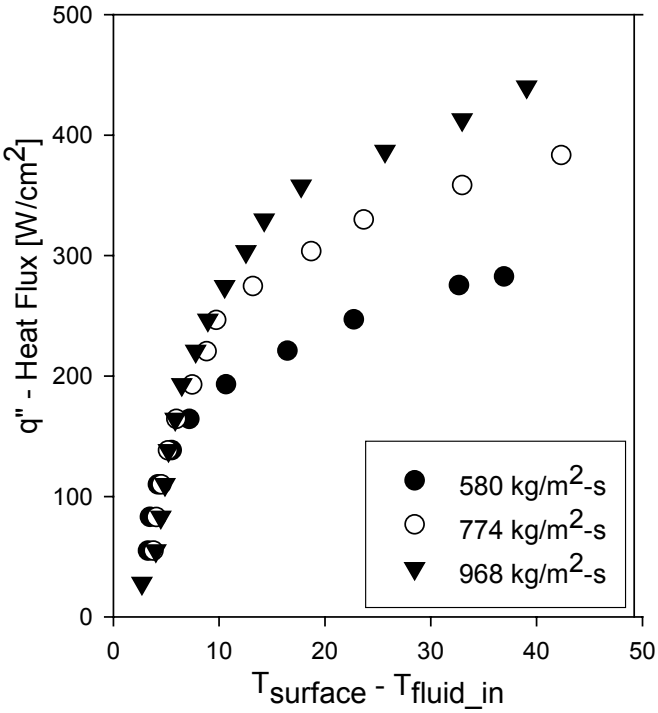

Fig. 3. Flow boiling curves for different mass flux values

As shown in Fig. 3, at low heat flux values, the surface temperature is almost independent of mass flux and the boiling curves are steep, indicating high heat transfer coefficients as a result of nucleate boiling. However, at higher heat fluxes, the slope starts to decrease and the surface temperatures look more dependent on mass flux, deviating from the low heat flux pattern. To better understand the phenomena, the same results are plotted in Fig. 4 in a heat flux versus heat transfer coefficient chart. The figure shows an interesting relation between heat flux and heat transfer coefficient. First of all, for selected mass flux range, it is clear that heat transfer coefficient is strongly dependent on heat flux. This effect can be a sign of more nucleate boiling dominant and less convective participant heat transfer mechanism. Secondly, starting from low heat fluxes, the heat transfer coefficient has an increasing trend until a point where it reaches a maximum. After the peak point, heat transfer coefficient starts to decrease with further increase in the heat flux. The rise in heat transfer coefficients with increased heat flux is expected: the heat transfer is enhanced by phase change related to the transition from single phase to two phase heat transfer mode. The decreasing trend at high heat fluxes can be attributed to local dryouts created by bubble generation in the limited bubble growth expansion space provided by a typical microchannel. When the generated average bubble diameter exceeds the hydraulic diameter of the microchannel, it starts to be constrained by channel walls. As a result, local dryouts occur and pumping power increases due to channel flow blockage.

Thirdly, the maximum heat transfer coefficients for all curves lie in a narrow range of 250 $<h_{max}<300$ kW/m^{2}K, showing that h_{max} is almost independent of any parameter, and its position is shifted to higher heat fluxes by increasing the mass flux. It is also important to note that hmax is a result of the reported particular flow configuration. For different microchannel geometries, flow distribution header dimensions or refrigerant, the h_{max} value can be quite significantly different. Fourthly, for each mass flux, the heat transfer coefficient curves have the similar bell shape distribution. Therefore, for all mass fluxes, the trend in all curves looks very similar to each other. This characteristic is particularly useful when designing predictive engineering tools such as correlations.

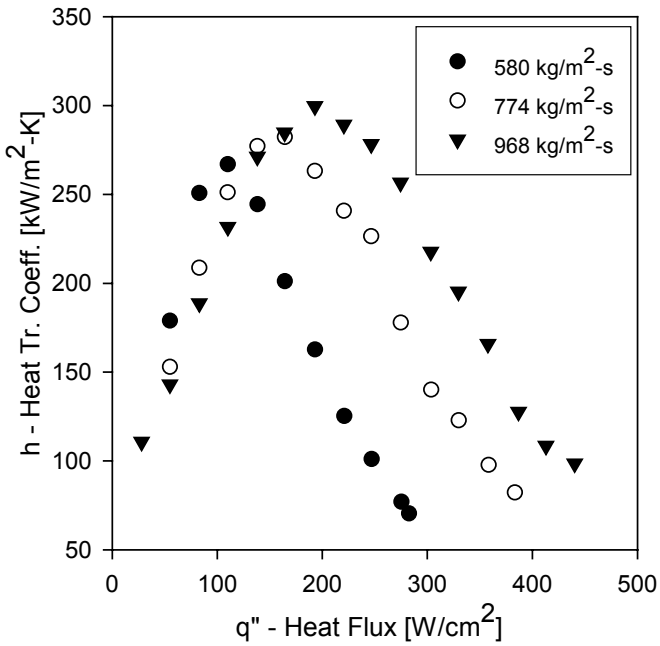

Fig. 4. Heat flux versus Heat transfer coefficient for different mass flux values

At macroscale, the flow boiling heat transfer mechanism is classified in two categories: nucleate boiling and convective boiling dominate heat transfer. Although as mentioned earlier the heat transfer mechanism shows signs of nucleate boiling, more evidence is needed to draw definitive conclusions in this regards. For this purpose, all previous data were plotted on a x_{out} versus heat transfer coefficient chart, as shown in Fig. 5. The characteristics that define convective boiling is the heat transfer coefficient dependency on mass flux and exit quality and very weak dependency on heat flux. On the other hand, nucleate boiling is defined as weekly depending on mass flux, but significantly dependent on heat flux. Fig. 5 shows that heat transfer coefficient curves substantially overlap, resembling nucleate boiling characteristics. This justification appears to be meaningful since the calculated liquid only Reynolds number Re_{LO} in the microchannels varies between 29 and 116 and the thermal conductivity of refrigerant used in the tests is relatively low. The pressure drops in these experiments were observed to range from 8 to 45 kPa.

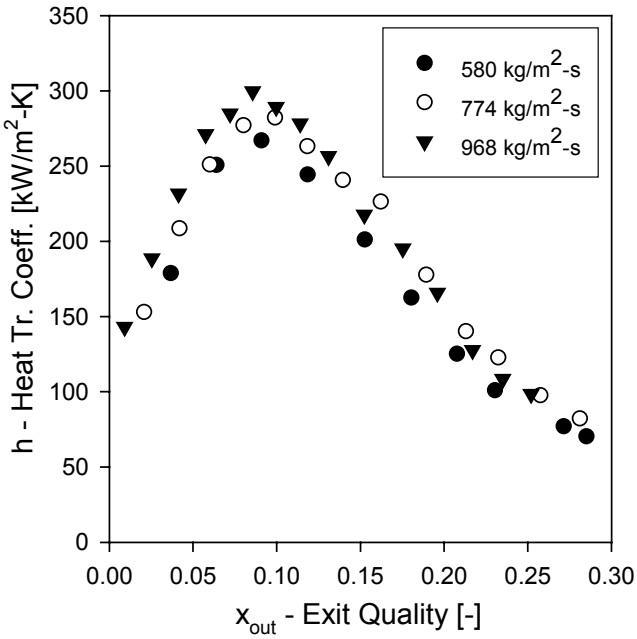

Fig. 5. Heat transfer coefficients versus exit quality

FFC EXPERIMENTAL RESULTS

The variations of the heat transfer coefficient and pressure drop with heat rejection flux are given in Fig. 6. Two different refrigerants with different flow distribution configurations were used for testing. The first tests were performed using HFE-7100 as refrigerant. This is a well-known fluid frequently used in electronics cooling application and it boils at 60 °C at atmospheric conditions [6]. It was found that for this configuration the surface was able to cool 58 W/cm^2 with a heat transfer coefficient of 31.9 kW/(m^2·K). The increase in refrigerant mass flux (which correlates to heat rejection) increases the pressure drop across the surface, which is expected. The pressure drop for the maximum heat flux of 58 W/cm^2 heat rejection is 1044 Pa, which is a relatively low value. In all the experiments, the refrigerant entered the test section at 100 % quality and T_{sat} and exited at 0% quality with minimum (less than 1 C°) subcooling.

The second force-fed condensation tests were performed using R-245fa. Due to the superior thermal properties of R-245fa, much higher heat transfer coefficients were achieved at a given heat flux with this refrigerant. For the present experiments heat transfer coefficients as high as 42.4 kW/(m^2·K) were achieved with a pressure drop of only 600 Pa. The high heat transfer coefficient values with low pressure drop and the compact design of the force-fed condenser make it an important candidate for replacing the conventional condensers used in many applications.

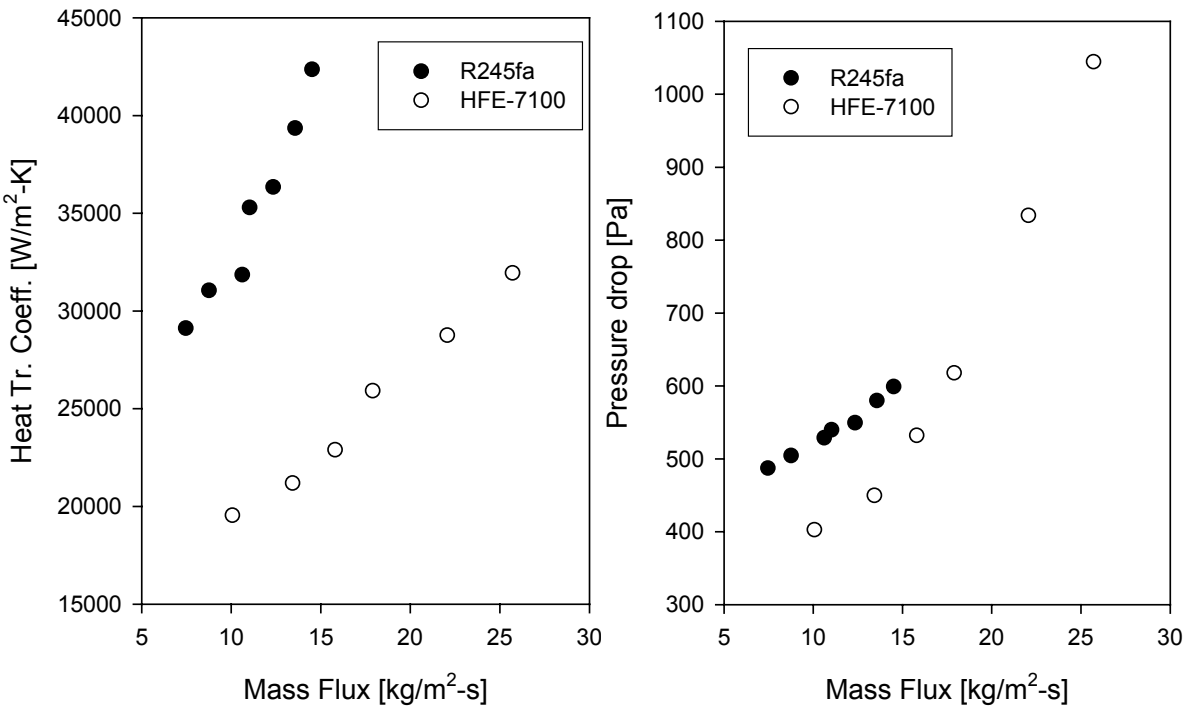

Fig. 6. Variation of condensation heat transfer coefficient and pressure drop versus mass flux for FFC and different refrigerants

CONCLUSIONS

From the results of the present study the following conclusions can be drawn:

1. The force-fed technique was tested for force-fed boiling and force-fed boiling in the current experiments. The experimental results show that this method of heat transfer is a promising alternative for applications requiring high heat flux removal rates, yet relatively low pressure drops. For the experiments reported in this study, an evaporation heat flux of up to 450 W/cm^2 with heat transfer coefficient of 300.9 kW/(m^2·K) using R245fa was demonstrated. The corresponding force fed condenser can reject 28 W/cm^2 with a heat transfer coefficient of 42.4 kW/(m^2·K) and pressure drop of only 600 Pa using R-245fa as the working fluid. The presented heat transfer coefficients far surpass

the magnitudes reported in literature for the given operating conditions of the experiments reported here.

2. The high heat transfer coefficients obtained were representative of a combined boiling and forced convection regime. However, for low heat flux levels (up to 200 W/cm^2) boiling strongly depended on heat flux and almost independent of the mass flux. Beyond a heat flux of 200 W/cm^2 the enhancement in heat transfer due to phase change is suppressed by the possible local dryouts. Increase in mass flux moves the dryout condition to higher heat flux levels.

3. The dominant heat transfer mechanism in microchannels for FFB appears to be nucleate boiling. This also suggests that convective effects such as jet impingement or flow separation associated with FFB have little effect on the heat transfer coefficients. However, no definitive conclusion in this regard can be drawn until additional experimental data is collected and compared with the available microchannel nucleate boiling correlations and experimental tests. Quantitative flow visualization experiments are also need to better understand the mechanism involved.

4. Condensation heat transfer coefficients and the corresponding pressure drop values have an increasing trend with increasing the mass flux. Condensation study needs to be extended for higher mass and heat fluxes to determine the dominant heat transfer mechanics.

5. Future work should include study of bubble growth mechanism in the microchannel for an optimum design to avoid dryout regions fro force-fed boiling at higher heat flux levels.

Acknowledgements

The authors would like to thank the Office of Naval Research for the financial support of this project and to Wolverine, Tube, Inc. for providing the micro-structured surfaces that were used in testing. All tests described in this study were performed at the University of Maryland, Smart and Small Thermal Systems Laboratory.

References

1. Agostini B., Fabbri M, Park J. E, Wojtan L, Thome J. R, Michel B (2007) State of the art of high heat flux cooling technologies. Heat Transfer Engineering 28: 258-281 DOI Doi 10.1080/01457630601117799
2. Baummer T., Cetegen E., Ohadi M., Dessiatoun S. (2008) Force-fed evaporation and condensation utilizing advanced micro-structured surfaces and micro-channels // **Microelectronics J.** 39: 975-980 DOI DOI 10.1016/j.mejo.2007.07.005
3. Cetegen E., Baummer T., Dessiatoun S., Ohadi M. (2007) Heat Transfer Analysis of Microgrooved Evaporator and Condenser Surfaces Utilized // *High Heat Flux Two-Phase Flow LoopASME International Mechanical Engineering Congress and Exposition*, Seattle, WA.
4. Cetegen E., Dessiatoun S., Ohadi M. (2008) Heat Transfer Analysis of Force Fed Evaporation on Microgrooved Surfaces // *ICNMM2008-62285 (ed) Sixth International ASME Conference on Nanochannels*, Microchannels and Minichannels, Darmstadt, Germany.
5. Honeywell (2008) Honeywell Speciality MaterialsGenetron Refrigerants.
6. 3M_Novec (2008) 3M™ Novec™ Engineered Fluid.