OPTIMIZATION OF THE THERMODYNAMIC CYCLE AND CONTROL SYSTEM OF HEAT PUMP STATION IN THE WIDE RANGE OF HEAT CAPACITY VARIATION

M. L. Sit, A. A. Juravliov, B. M. Sit

Laboratory of Microprocessor Control Systems
Institute of Power Engineering of the Academy of Sciences of Moldova
MD2060, Republic of Moldova, Chisinau, Academiei, 5
Tel/fax:(37322)738135/(37322)735382; e-mail: ieasm@cc.acad.md; mihail_sheet@yahoo.com

Abstract

The purpose of work is basing on the developed of heat pump station (HPS) structure, to create an effective HPS thermodynamic cycle and its control system for work in district heating systems of the centralized heat supply system. The description of the control laws of evaporator at the variable heat load of the HPS and control laws of the gas cooler taking into account the goal of achieving the maximum of COP of HPS is shown as well. The two-level control system in which the coordinating regulator provides the delivery of set point signals for subsystems regulators is necessary to achieve the maximal power efficiency of the complex HPS - CHP. Pressure control system after the evaporator should work a regulator of pressure difference between pressure after the compressor and pressure after the evaporator. Water temperature control system after the gas cooler should be executed as a system with the object model and include a subsystem of gas pressure regulation after gas cooler, and the block controlling compressor capacity and gas consumption through the gas cooler.

KEYWORDS
Heat pump station. Gas cooler control.

INTRODUCTION

The important direction of development of power is the use of renewable energy sources and secondary power resources (thermal dumps of power, industry, municipal services, etc.), usually having low temperature potential. Applications of heat pump stations (HPS), including of vapor compression type, allows to provide economy of fuel on heat power plants at their use in systems of a heat supply, to lower cost of heat for the consumer. The most perspective from the point of view of economy and ecology are HPS, using dioxide of carbon as a working body. The problem of efficient heat pumps control in the regimes different from nominal is of current importance and just in this direction given work is executed. Objects of the research are HPS control systems on central heat supply stations in quarter heat distributing networks, effective thermodynamic cycles and laws of control providing the maximum possible coefficient of performance (COP) of HPS.

A lot of works are devoted to the questions related to HPS working on carbon dioxide (R744) development and utilization; as an examples papers [1-5] could be enumerated. Papers [6-12] are devoted to the questions related to the HPS control systems research. Basic technical solutions concerning HPS control are determined in these papers, taking into account the necessity of HPS cycle optimization. A plenty of works of such authors, as E.Ia.Sokolov, V.I.Livchak, V.S.Falikov, N.M.Zinger, A.N.Melentyev, S.A.Chistovich, V.P.Turkin and many others are devoted to the problems of central heat supply station (CHSS) regime control. In present, the problems of system CHP-HPS-CHSS control practically are not investigated.

Goals and scope. The purpose of work is to create an effective HPS thermodynamic cycle and control system for its work in CHSS of CHSS basing on the developed HPS structure.

HEAT PUMP STATION STRUCTURE

HPS structure scheme (block diagram) of heating and hot water supply systems is shown on Fig.1.

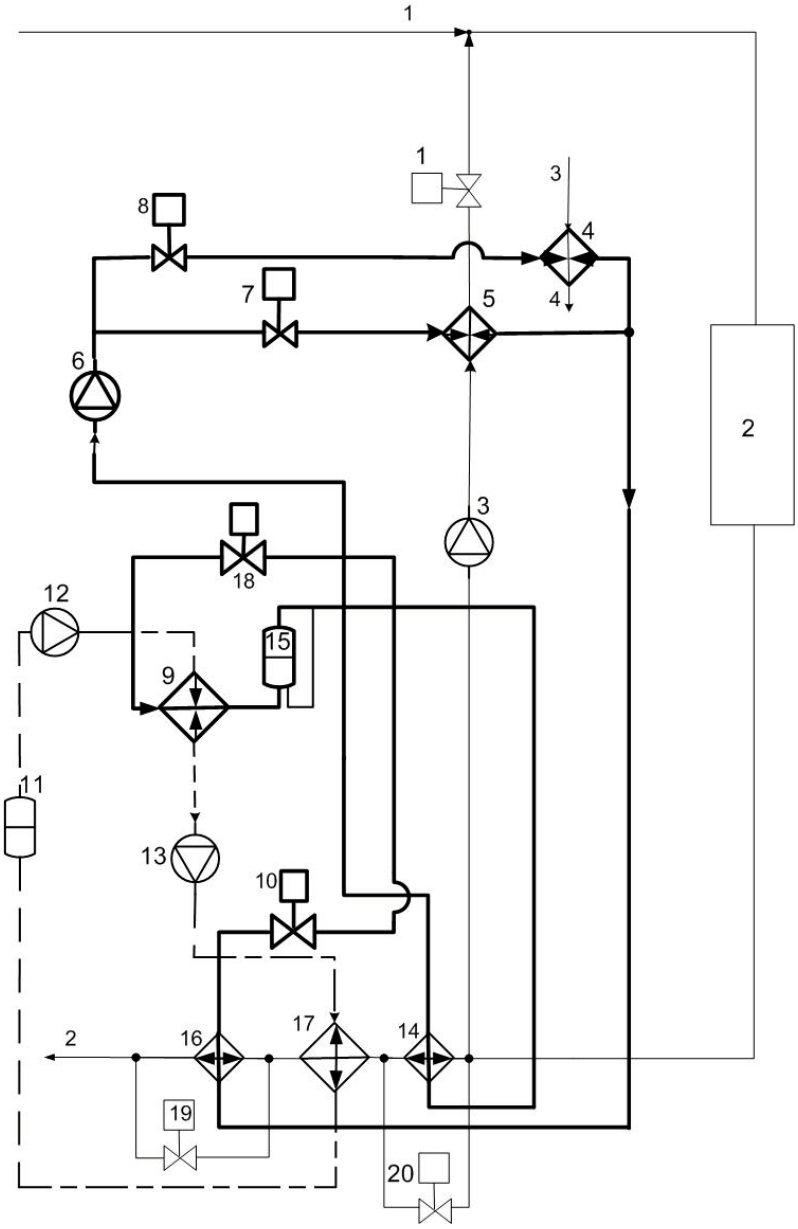

Fig.1. HPS structure scheme

Following signatures are accepted: 1 – the control valve on a return water network mixing line; 2 – DHS thermal load, 3 – return DHS water mixing pump; 4,5 – heating and hot water supply systems gas coolers, 6 – compressor, 7, 8 – control valves of HPS working agent flow rate through gas coolers, 9 – evaporator, 10 – compressor pressure control valve, 11 – tank of an the intermediate heat agent loop, 12 – the pump for feeding of the intermediate heat agent to the evaporator, 13 – the pump for feeding of an intermediate heat agent from the evaporator into the return water heat exchanger, 14 – heat exchanger for superheat of a working agent of HPS, 15 – separator of liquid carbon dioxide, 16 – heat exchanger for a HPS working agent subcooling, 17 – return water of CHSS/ intermediate heat agent heat exchanger, 18 – evaporator pressure control valve, 19 – the control valve of a working agent subcooling control system, 20 – the control valve of the working agent superheater control system. The complex works in the following way. Direct water from CHP enters with the lowered temperature schedule in the heating system of heated buildings 2, its part which is warmed up in gas cooler 5 is taken away by the pump 3. This part of the water flow is determined by a degree of the

control valve 1 opening (depending on the demanded temperature of direct water on an input in the buildings heating system). The contour of circulation of a heat pump working agent is designated by a semi-bold line. Return water (it is designated by a thin line) from a quarter heat network goes on the heat exchanger 17. In this loop the nonfreezing liquid, for example, ethylene glycol is circulating. The loop of the intermediate heat-carrier circulation is designated by a dashed line. Circulation is provided using two pumps 12 and 13. The level of a liquid in the evaporator (vertical liquid type) is maintained due to corresponding pumps control regime.

The level of a liquid phase in the evaporator defines the level of the evaporator filling from the working agent with liquid carbon dioxide (in a place of their contact through walls of pipes of the evaporator there is a heat exchange between the intermediate heat-carrier and a heat pump working agent), which defines the evaporator thermal conditions. In the evaporator an evaporation of liquid carbon dioxide takes place then this mix enters through a separator of a liquid 15 into the heat exchanger - gas superheater 14, installed before the compressor. Gas superheat is provided due to the heat of the return water. Gas superheat value is defined by the water flow rate through a primary line of heat exchanger 14 and controlled by the control valve 20 installed in parallel on water to the heat exchanger 14. Due to the control of the superheat of a working agent after the evaporator its temperature remains constant independent from the temperature variations after the evaporator. As a result reliability and stability of the heat pump is growing regardless of the working regime of evaporator and of the intermediate heat-carrier circulation loop connected with the evaporator.

Compressors 6 absorb working agent steam and feed it in gas coolers 4 and 5. The gas flow through each gas cooler is adjusted by control valves 7 and 8. Further working agent through control valve 10 enters into the heat exchanger - working agent supercooler 16 and further in the evaporator 6 through the valve 8 controlling pressure after the evaporator.

Supercooling degree control is provided due to the control valve 19 installed in parallel to primary heat exchanger 16. The characteristic feature of proposed HPS scheme is an absence of a internal heat exchanger in the heat pump. This heat exchanger is replaced by heat exchangers 14 and 16. The idea is that at the variable working agent flow rate the heat exchanger working regime becomes no controllable at the flow rates, differing from the consumption accepted as nominal. At the presence of the internal heat exchanger the control system of HPS could not adjust working agent superheat degree at different heat loads that would lead to COP decrease.

At the decision of a question about the utilization of the return water heat coming from the buildings heating system at HPS use a problem appears: how to provide the maximal power efficiency of this system. It is necessary to develop corresponding structure of a control system for the decision of this problem and to formulate the basic requirements to it. In what follows the subject of an investigation is the control system of the combined heat pump intended for both return water heating coming from heating system and for heat water supply, which is optimal by the COP maximum criterion. In such a system the optimization of system control is ensured, including due to the distribution of working agent streams between gas coolers, responsible for water heating coming from heating system and water coming from the cold water supply pipeline to provide a minimum of the electric power consumption used for the required regime maintenance. With this purpose energy consumption is minimized by:

- the optimization of HPS work cycles parameters in transients;
- the minimization of energy consumption due to the optimization of transients at perturbations action.

The basic distinguishing feature of the control system is its two-level structure where in an external control contour the coordinating regulator carries out optimization thermodynamic loop parameters i.e., dynamic tasks for concrete HPS control systems. Properly in control subsystems an optimization by criteria of a minimum mean square error, speed and others (taking into account functioning of this subsystem in a multilinked control system) is made when applying to the subsystem perturbation and setting influences. In HPS, installed on CHSS, the operating conditions are defined by atmospheric conditions (temperature of external air, speed of a wind), heat-carrier parameters, heat load change in time. Heat load change in time defines the prescribed and actual direct and return water temperatures values fed to a building. In the heat pump the parameters defining its working regime are pressure and temperature of a working agent in the gas cooler, pressure and

temperature in the evaporator, in the working agent superheat heat exchanger, an superheat of a working agent after the evaporator. HPS controls are capacity and compressor drive rotation speed, pressure after the compressor, degree of control valve opening, water flow rates through the evaporator and gas coolers.

So, for example, at adjusting of the control valve the difference of pressures between the HPS high and low pressure parts changes which influences on working agent consumption, heat exchange and COP value. At the coordinated control of speed, compressor drive capacity and throughput of the control valve energy economy and reliability increase of HPS work is achieved. During its functioning HPS power efficiency essentially depends on a thermodynamic condition of working agent in its various components. For example, work of the evaporator is characterized by the temperature (or pressure) of evaporation, by working agent superheat, and depends on pressure and gas temperature. An appropriate way organized control of these variables and their change in dynamics leads to an efficient functioning of the installation and thus increases the term of its service. For example, superheat control is very important for the compressor work. If the superheat is small, there is a danger that a liquid working agent can hit the compressor, and if the superheat is raised power efficiency of installation decreases and substantial increase of compressor discharge temperature is possible. At atmospheric conditions, direct and return water temperatures, solar radiation change, both HPS working goals and operating conditions changes. So the transition to new HPS working regime should happen at minimal time and with a minimum of the electric energy overexpenditure (as these disturbances act, as a matter of fact, continuously).

On the HPS control system block diagram (see Fig. 2) its components are shown.

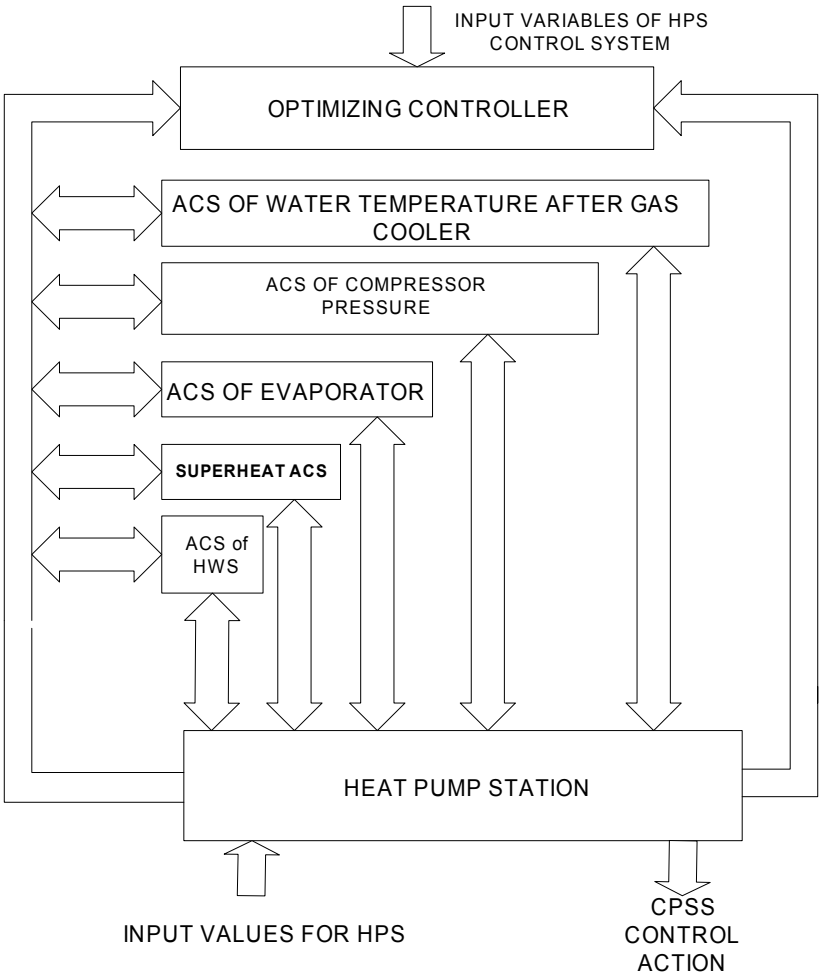

Fig. 2. HPS control system block diagram

Let's preliminary consider thermodynamic cycles of HPS work depending on external air temperature, see Fig. 3, t_H – external air temperature. On Fig. 3 p.1 – working agent pressure and

temperature after gas cooler, p. 2 – the same after the compressor, p. 3 – the same after heating systems gas cooler, p. 4 – the same after gas supercooler, p. 5 – the same in front of the evaporator, p. 6 – the same after the evaporator. Cycles consideration shows that at external air temperature change it is necessary to ensure HPS functioning at variable pressures in gas cooler and in the evaporator. On Fig. 3 an internal graph shows HPS cycle at $t_H = 6^{\circ}C$, and external at $t_H = -9^{\circ}C$, where on abscissa axis – enthalpy is in kJ, and pressure in MPa.

As "pressure - enthalpy" diagram (see Fig. 3) shows at considered HPP gas (or liquid) enters on its adjusting valve, and on its adjusting valve output a gas-liquid mix appears because of the throttling. Process of pressure decrease in the adjusting valve is adiabatic. The presence of a liquid phase in a mix after the compressor pressure control valve depends from gas cooler and evaporator working regime.

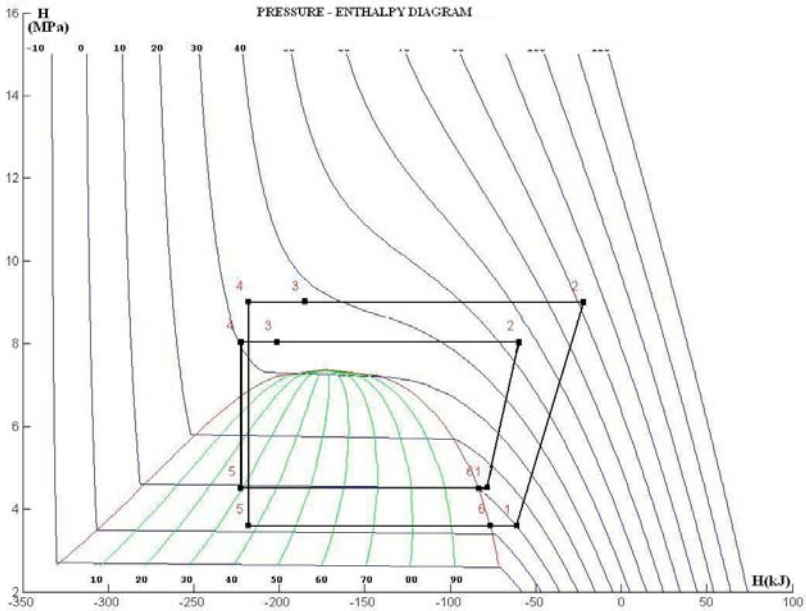

Fig. 3. HPS thermodynamic cycles

It is known, that the control valve as the object of control in the compressor pressure stabilization control system represents an inertial element with variable parameters (inertia of the valve is defined by inertia of its drive), depending from working agent parameters passing through the valve.

Therefore into the pressure stabilization system structure before of the compressor it is necessary to introduce the signals describing temperature and pressure of a working agent before the control valve and predicted characteristics of the working agent, defined by the parameters of HPP thermodynamic cycle. In transcritical cycles pressure before of the control valve stabilizes gas cooler working regime and, hence, compressor discharge pressure. Therefore compressor discharge pressure is not an independent variable, and compressor and gas cooler (gas coolers at heating of water for hot water supply) is necessary to consider in common as one unit.

For optimal control conform under criteria of maximum of COP it is necessary to provide coordinated control regime managing both pressure of the compressor, and its productivity, and also temperature of an superheat of gas. This problem can be solved by the specialized calculator in the fast–time scale (provided that dynamic HPS and heated object models are preliminary identified).

The structure of a working agent pressure control system after the evaporator is presented on fig. 4. On fig. 4 $P_S -$ given pressure after the compressor, $P_o -$ actual pressure after the compressor, $\varepsilon = P_S - P_O$ - regulator error (mismatch) signal C, $k_1, T_1 -$ gain constant and time constant of an control valve rod electric drive, as control object of the speed of control valve rod movement, $v -$ control valve reducer reduction ratio, $y, \dot{y} -$ control valve stroke and speed, $f(y) -$ control valve pressure drop as a function of control valve rod stroke, $G -$ the mass gas flow rate on an input of an

control valve, x_0 – gas-liquid mixture dryness (aridity) before of the evaporator. The control law for this system is chosen from a class of nonlinear pulse–width modulation control laws.

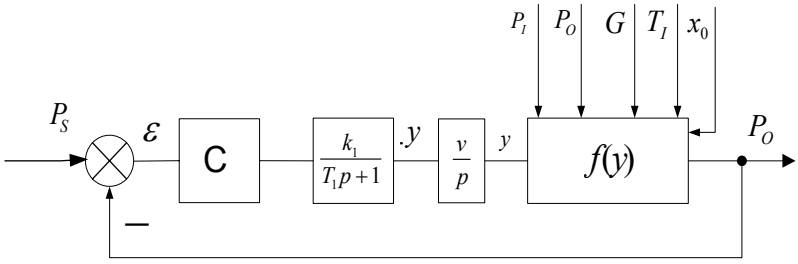

Fig. 4. Flowchart of compressor pressure control system

As the control valve characteristic is influenced by the working agent parameters before and after the control valve, and also by a prescribed value of gas-liquid mixture dryness before the evaporator with the purpose of stability maintenance and the accuracy in the considered parameter control law the dependence of the control valve characteristic of the control valve from the above-stated parameters should be considered. The criterion of quality of this system functioning should be the accuracy of maintenance of a prescribed pressure value before of the compressor.

Gas cooler may be considered at the work in transcritical cycle as the dynamic element with variable parameters and it may be described, under certain assumptions, by the system of first order differential equations of the following type [13]:

$$\frac{\partial T_1(t,x)}{\partial t} + v_1 \frac{dT_1(t,x)}{dx} = K_{12}\left(T_2(t,x) - T_1(t,x)\right), \tag{1}$$

$$\frac{\partial T_2(t,x)}{\partial t} + v_2 \frac{dT_2(t,x)}{dx} = -K_{13}\left(T_1(t,x) - T_2(t,x)\right), \tag{2}$$

where v_1, v_2 – velocities, x – linear coordinate, K_{12}, K_{13} – are functions of pressures, temperatures, velocities and design values of the heat exchanger. Output value of the gas cooler it the water temperature $T_2(0,t)$, control values for the gas cooler are working agent temperature on the input of the gas cooler $T_1(0,t)$ and the working agent flow rate v_1. The flowchart of the control system of water temperature is presented on the fig.5.

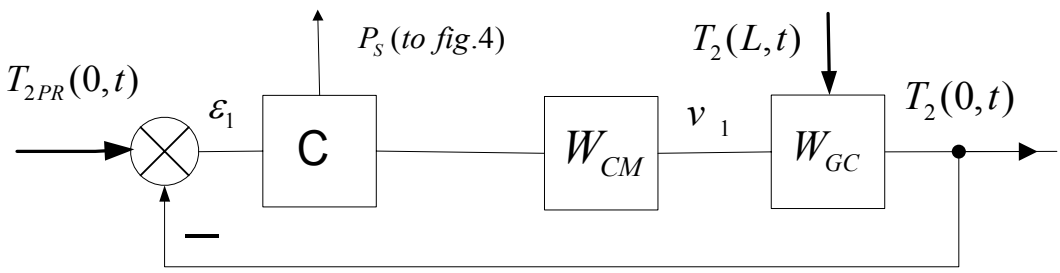

Fig. 5. Flowchart of heating water temperature control system: C – controller, W_{CM} – compressor, W_{GC} – gas cooler, P_S – set point pressure for the control system, see Fig.4

CONCLUSION

1. The two-level control system in which the coordinating regulator provides the delivery of prescribed signals for subsystems regulators is necessary for achievement of the maximal power efficiency of complex HPS - CHP.

2. Pressure control system after the evaporator should work as a regulator of pressure difference between pressure after the compressor and pressure after the evaporator.

3. The system of water temperature regulation after the gas cooler should be executed as a system with object model and include a subsystem of gas pressure regulation after the gas cooler, and the block which controls compressor capacity and gas consumption through the gas cooler.

References

1. Kim M.H., Pettersen J., Bullard C.W. Fundamental process and system design issues in CO2 vapor compression systems // *Progress in Energy and Combustion Science*, 2004. Vol. 30, p.119-174.
2. Eisenhover B.A. Runolffson System level modeling of a transcritical vapor compression system for bistability analysis // *Nonlinear Dynamic*s, Springer, 2008, http://www.springerlink.com/content/unk0535627143633/fulltext.pdf.
3. Yin J.M., Bullard C.W., Hrnjak P.S. „R-744 gas cooler model development and validation“ // *Intern. J. of Refrigeration,* 2001. 24, p.692-701
4. Калнинь И.М., Деревич И.В., Пустовалов С.Б. “Исследование газоохладителей тепловых насосов на R744” // *Холодильная техника и технология*», №11, 2004, с.10-15.
5. Деревич И.В., Калнинь И.М., Смирнова Е.Г. «Экспериментальное и теоретическое исследование испарителя теплового насоса на диоксиде углерода» //*Холодильная техника и технология*, №2, 2005, с.12-16.
6. Jensen J.B., Skogestad S. „Optimal operation of simple refrigeration cycles. Part I: Degrees of freedom and optimality of subcooling“ //*Computers and Chemical Engineering*, 2007. Vol. 31, Issues 5-6, p. 712-721.
7. Jensen J.B., Skogestad S. „Optimal operation of simple refrigeration cycles. Part II: Selection of controlled variables” // C*omputers and Chemical Engineering* 31 (2007) 1590-1601.
8. Komareji M., Stoustrup J., Rasmussen H., Bidstrup N., Svendsen P., Nielsen F. „Optimal Set-point Synthesis in HVAC Systems“ // *Proceedings of the 2007 American Control Conference, New York City, USA*, July 11-13, 2007, p.5076-5081.
9. Larsen S.L., Thubo C., Stoustrup J., Rasmussen H. Control Methods Utilizing Energy Optimizing Schemes in Refrigeration Systems. ECC2003, Cambridge, U.K.. September 2003.
10. Svensson M.S. “Model-Based control of Water-to-Water Heat Pump Unit” // *Modeling, Identification, and Control* (MIC), Vol. 17, No. 4, October 1996, p.279-294.
11. Cheng T., He X.-D., Asada H.H. Nonlinear Observer Design for Two-Phase Flow Heat Exchangers of Air Conditioning Systems // *Proceedings of the 2004 American Control Conference. Boston* / Massachusetts, June 30-July 2, 2004.
12. He X.-D., Asada H.H., d’Arbeloff A New Feedback Linearization Approach to Advanced Control of Multi-Unit HVAC Systems // *Proceedings of the 2003 American Control Conference, Denver* / Colorado, June 4-6, 2003.
13. Шевяков А.А., Яковлева Р.В. Управление тепловыми объектами с распределенными параметрами. М., Энергоатомиздат, 1986, 206 с.