CONTROLLABLE INTERFACE JOINT OF TWO LOOP HEAT PIPES

S. A. Piyukov
“Polyot” Association, Omsk, Russia

K. A. Goncharov, A. Yu. Kochetkov
Lavochkin association, TAIS Ltd, Chimky, Moscow region, Russia

This paper is devoted to description of two LHPs interface joint which represents assembly of one LHP evaporator and the latter LHP slit condenser as a conductive heat exchanger “pipe in pipe” type by using intermediate thread element.

Interface joint is proposed for using in spacecrafts thermal control systems based on LHP. LHP interface joints are necessary, for example, while mounting heat source and heat sink on the separable spacecraft modules.

By its functional purpose, the LHPs attached to the heat emitting objects let be called heat-absorbing LHPs and the LHPs attached to a “source of cold” or having radiator let be called heat-rejecting LHPs.

Naturally, the interface joint is required to have conductance and low mass. The simplest case of the separable interface joint is a bolted connection of two aluminum plates – “saddles” with condenser of heat-absorbing LHP and evaporator of heat-rejecting LHP pressed in them.

Interface joint of “saddle” type has significant thermal resistance and great “parasitic” mass (0.2–0.3 kg). Acceptable conductance of the saddles with heat loss of up to 10 % can be reached when treating surfaces no worse than $\sqrt{}^{0.32}$ and with high pressure of the plates more than 5 MPa [1].

When attaching a cylindrical evaporator of heat-rejecting LHP to a circular condenser of heat-absorbing LHP by method of “cylinder to pipe” the following technological problems can interfere with the wide application of this kind of joint:

- difficulty of cylindrical surfaces fitting to obtain good contact;
- necessary of clamping device mounting;
- impossibility of obtaining good pressing of the contact surfaces.

Application of additional contact element as a thread cylindrical spacer between contact surfaces can solve the problem.

To obtain this, the outer surface of evaporator and inner surface of condenser are to be threaded in opposite directions – right-side and left-side.

Thread of the cylindrical spacer surfaces must fit the contact surfaces (see Fig. 1). Thread pitch is naturally the same on all contact surfaces. Threads must be matched so that during rotation of the spacer 2, the evaporator 3 by forward motion is to be “drawn” into the spacer and the condenser 1 “comes over” it. During this, the condenser and evaporator are to be fixed to avoid probable rotation but giving possibility for forward motion.

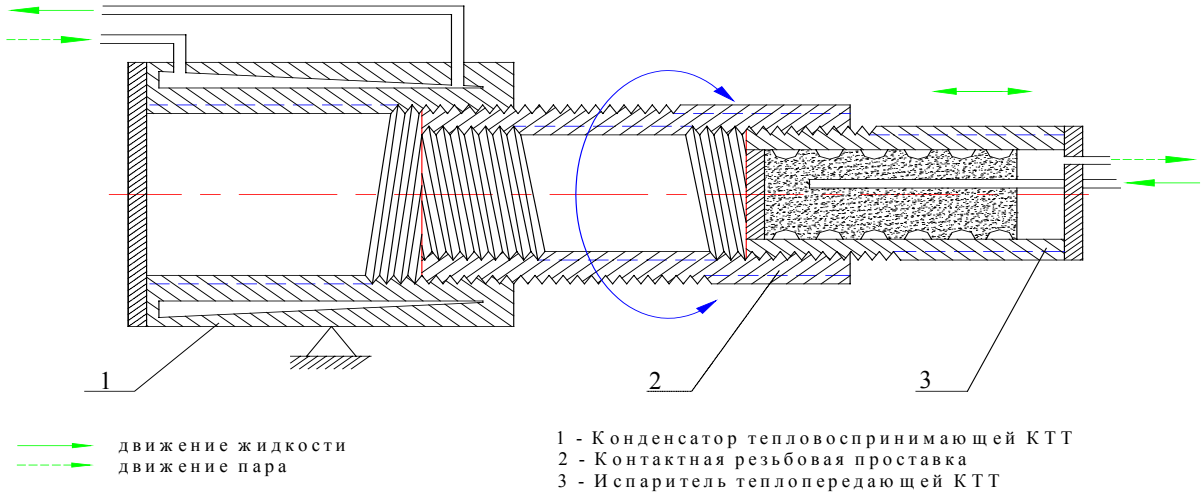

Fig. 1. Controllable interface joint of two LHPs

Contact conductance will significantly increase if the spacer is made of the soft aluminum alloy with thread tolerance ensuring after the first screwing good thread fitting along all surfaces of the thread turns.

Using the fact that during the rotation of the spacer 2, the contact area of “condenser – evaporator” is changed, thermal conductance of this contact may be controlled. It is a valuable thing both for ground heat devices and space thermal control systems when controlling may be used during on-ground testing. For example, optimal value of the contact conductance in the joint that has been found compensates inaccuracy of LHP design or manufacturing.

Interface joint is 2,5 as lighter than traditional device with aluminum “shoes” and its conductance is 1.5 as higher and allows controlling of the thermal contact conductance.

Reference

1. Smirnov G. F., Tsoi A. D. Heat exchange during vapor generation in capillary and capillary-porous wicks. M.: Moscow Institute of High-Power Engineering, 1999. P. 120.