ON THE ISSUE OF HEAT PIPES APPLICATION IN METAL-WORKING TECHNOLOGICAL SYSTEMS

Yury S. Dubrov, Dmitry Y. Dubrov, Galina S. Nikolaeva
Rostov-on-Don Agricultural Engineering Academy
Strana Sovetov Sq. 2, Rostov-on-Don, Russia 344023,
Tel.: (7-863) 252-41-35; DUS@fromru.com

Abstract

The possibility of heat pipes applications in technological metal working systems is considered.

The mathematical model for the heat pipes geometrics and thermal parameters optimization problem solution is developed. The manufacturing testing confirmed the efficiency of the collapsible cutting tool with heat pipe.

KEYWORDS

Heat pipe; technological systems; metalworking; collapsible lathe tool; autonomous cooling system; thermal field.

INTRODUCTION

Tradition present metal-working refrigeration methods increase industrial diseases growth due to the lubricating coolants (LC) application and thereby exert influence on staff health. They promote technological system elements corrosion besides extra costs as well. Thereby the «dry machining» becomes widespread but unfortunately this method application is limited due to the growing extreme thermal loads in the frictional tool contact zone. However we can expect that the further expansion of the cutting without LC field of use is possible with the help of ecological autonomous cooling systems heat pipes (HP) based.

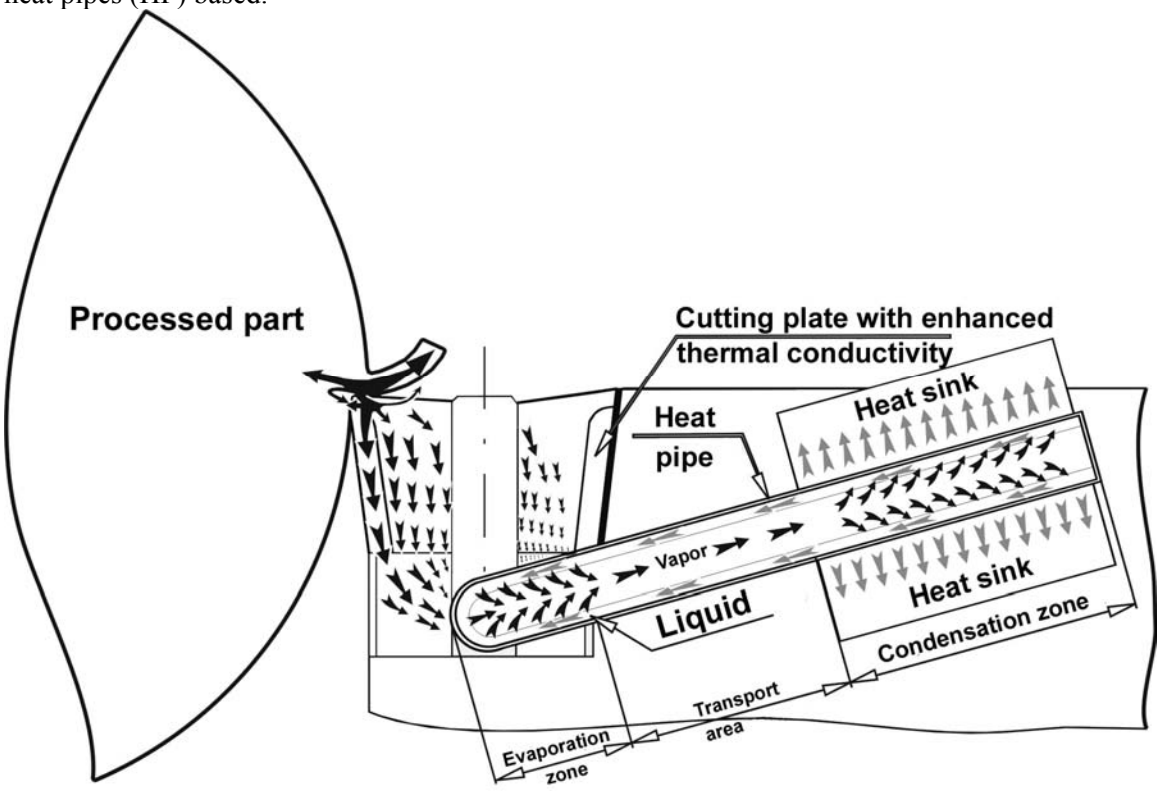

Fig.1. The collapsible lathe tool with autonomous cooling system (HP) model

It is well known that physical and technological foundations of the HP-application in the different branches of industry are researched in a fundamental way [1-4]. A number of works dedicated to the designing and researching problems of the autonomous cutting tool cooling systems are published recently (Fig. 1) [5-12].

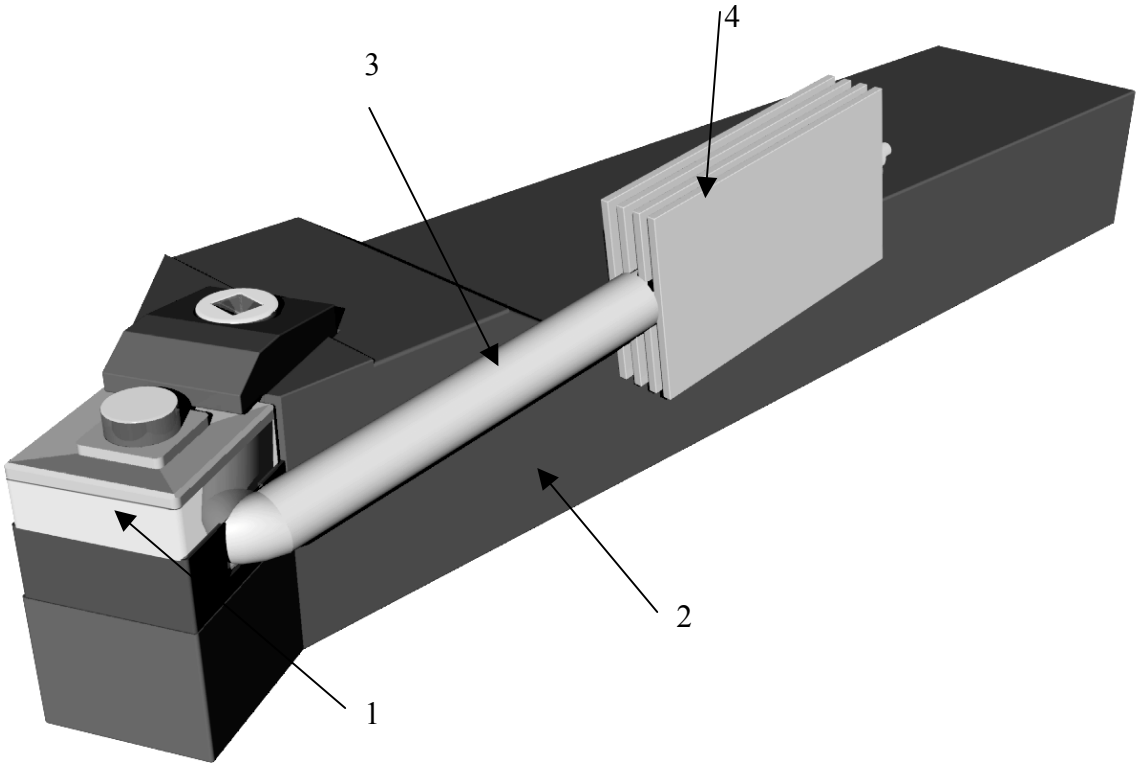

Fig.2. Collapsible cutting tool + heat pipe: 1 – cutting plate; 2 – collapsible cutting tool; 3 – heat pipe; 4 – radiator

The technological system parameter optimization is one of the HP investigation important stages for rational constructing technique creation purpose. We developed the mathematical model for the geometrics and thermal characteristics optimization problem solution. As a criterion function we take the quantity of heat (Q) passed by the heat pipe per time unit eq. (1):

$$Q = C\frac{\lambda^n \Pr^p}{l(r\rho_n\nu)^m}(\theta_s - \theta_н)^{m+1} S, \qquad (1)$$

where C – Reynolds criterion (Re)-dependent factor; λ – heat conductivity factor of the liquid heat-transfer agent by the saturation temperature $\theta_н$; Pr – Prandtl criterion; p, n, m – Re-dependent exponent power; l – HP characteristic dimension by the temperature $\theta_н$; r – heat of vaporization; $\rho_п$ – vapor density; ν – viscosity of the liquid coolant and θs – temperature and S – internal surface area of the heated pipe section.

The following HP geometrics are optimized: external diameter; angle of inclination; cooled and heated zones length correspondingly. Thermal characteristics (quantity of heat, heat flow density and the temperature of the heated section external surface) are determined versus HP geometrics. The thermal field of the collapsible tool solid modeling is executed and temperature values on the shank base of the cutter blade are computed. The wedge thermal field patterns demonstrated their dependence on the combination of thermophysical properties tooling and worked material and operating modes. In suggested model of the thermal and physical characteristics determination during the edge tool cutting the calculation is made with taking into account analytic definition of the shaving

shrinkage dimension and power characteristic. The computation is made with the help of MATHCAD 2000 and the solution algorithm is published in [8].

The calculation results are in table 1.

Table 1. HP calculation results

d_H , mm	d_B , mm	h_1 , mm	h_2 , mm	φ , D	Q_{hp} , W	q_{hp} , *10^5 W/m^2	θ, ^{0}C	Q_r , W	θ_r , ^{0}C	F_r , m^2
4	2				52,8	2,8		5,5	43	
5	3				79,5	3,4		5,75	44	
6	4	30	50	15	106	3,7	66	5,88	44,3	0.024
7	5				134	4		5,97	44,5	
8	6				161	4,3		6	44,7	

The analysis of the calculation result shows that the most acceptable model of the heat pipe providing the heat sink equal to the 106 W (Fig. 2).

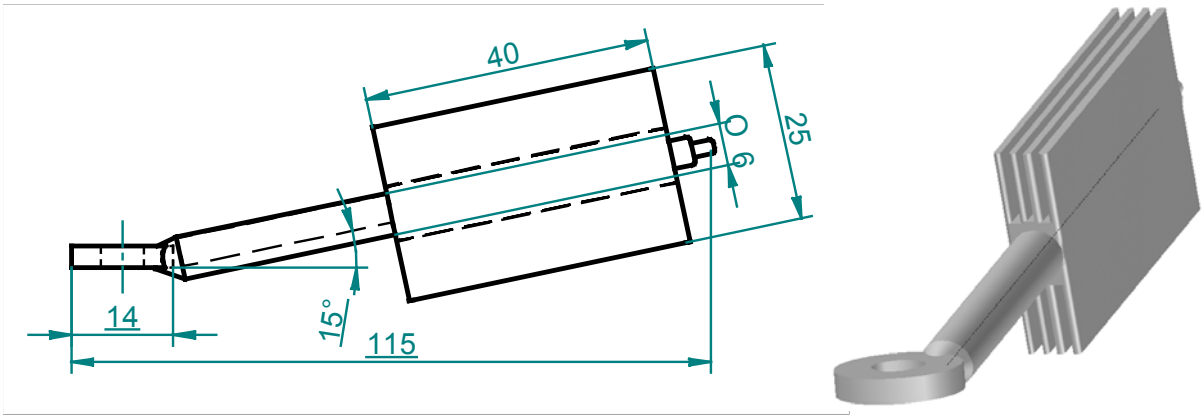

Fig. 2. The calculated heat pipe design used in collapsible tool with replaceable indexable inserts

The heat pipe of such type application is possible both during carbon tool steel and difficult-to-cut materials and fusions processing. The collapsible tool with heat pipe of such type experimental investigation made in laboratory environment confirmed that cutting power was raised 2.3-fold and sufficient temperature lengthening of the cutting tool- one of the most processing systematic error component decreasing was registered as well.

The manufacturing testing (PC «Rostselmash») of the collapsible tool with heat pipe showed its high efficiency. For example, the using of the collapsible tool with HP (Fig. 3) for programmable turning machine roughing without LC ensured the same efficient life as cutting blade with LC as well as went it up 30 percent with environmental safety supporting.

References

1. Vasiliev L.L., Konev S.V. *Heat-transfer pipes*. Minsk: Nauka i Tehnika, 1972.
2. Ivanovski M.N., Sorokin V.P., Iagodkin I.V. *Physical foundations of heat pipes*. M.: Atomisdat, 1978. p. 256.
3. Ivanovski M.N., Sorokin V.P. , Chulkov B.A., Iagodkin I.V. *Technological foundations of heat pipes*. M.: Atomisdat, 1980. p. 160.
4. Dunn, D. A. Reay *Heat Pipes* Pergamon Press, Oxford, New York, Toronto, Sydney, Paris, Braunschweig, 1976.
5. Resnikov A.N., Jivogliadov N.I. Cutting tools with autonomous cooling system // *Stanki i instrument*, 1987, №2, p.18.

6. Resnikov A.N., Resnikov L.A. Thermal processes in technological systems. M. *Mashinostroenie*, 1990. p. 288.
7. Dubrov Y.S., Iakuschev M.M., Mkrtchan A.Y., Gorbunov S.N. Experimental research of the heat pipe efficiency as a autonomous cooling system // *The integration of higher education and industrial science: modern machinery problems: The international scientific and technical conference materials*. Rostov-on-Don: RGASHM, 2000. pp. 96-97.
8. Dubrov Y.S., Iakushev M.M., Gribelni M.G. Optimal geometrics and physical parameters of heat pipes calculation//*The integration of higher education and industrial science: modern machinery problems: The international scientific and technical conference materials.* RGASHM GOU, Rostov-on-Don, 2001. p. 99.
9. Dubrov Y.S., Nujina E.A., Pavlenko O.N., Environmentally safe autonomous cooling system of cutting tools//*The vital activity safety. Labor and environmental protection. Inter-college scientific collected stories. N.5 (international) /* RGASHM, Rostov-on-Don, 2001.
10. Dubrov Y.S., Gribelni M.G. The collapsible cutting tool with heat pipes // STIN 2002 №9 pp.17-19.
11. Gribelni M.G., Dubrov Y.S. Mathematical estimation of the reliability of the collapsible cutting tool with autonomous cooling system // *Proceedings of the 18th International scientific conference "Mathematical methods in technique and technology." V.5.Section 5 Edited by Balakirev V.S. –* Kazan State technological university. 2005. p. 261.
12. Gribelni M.G., Dubrov Y.S., Nehoroshkov S.V. The heat pipe workability modeling with the help of thermoelectric Peltie-modules // *Proceedings of 19th international scientific conference "Mathematical methods in technique and technology".* V. 5. Section 5 Voronezh, VGTU 2006. p. 96–98.