INVESTIGATION OF THE RESULTS OF HEAT PUMP IN A REAL HOUSE

Tautvydas Antanas Aleksandravičius
"Šilumos mašinos"Ltd. Žilvičių str. 16A,
Garliava, Kaunas reg., Lithuania. Tel.+370 69820053
a.tautvydas@gmail.com; tautvydaster@gmail.com

Abstract

The paper presents some results on application of heat pump in comparison to gas boiler heating of rooms in a real house. The soil and the ambient temperature were measured and registered during the heating season. The temperature in the secondary side of the heat pump was 25–30 °C. The temperature inside room was 18–22 °C during the heating season. The estimated COP of the heat pump is presented.

INTRODUCTION

The heat pump which is installed in a real house for heating rooms is tested for the heating efficiency during three heating seasons. That the heat pump could operate properly it needs a low a temperature and higher temperature sources. The low temperature source is the soil. A low temperature heat exchanger is buried in a soil (loam) to depth of about 1.6–1.8m. The low temperature heat exchanger is made from plastic pipes of diameter 32 mm and length of 120 m in each of 3 loops. A higher temperature heat exchanger is installed in a floor and cowered by concrete and tesseras. The dimensions of the soil heat exchanger and the heat exchanger that heats the rooms are presented. The inside diameter of the higher heat exchanger tubes is 12 mm and the length is 190 m. The heat pump heating system contains gas boiler and a fan heat exchanger (air heater).

With the heat pump switched on the gas boiler was switched off. When the temperature inside the room was too low we may switch on the fan of the air heater which is supplied by heat from the heat pump too. The lower and the higher heat exchangers have a circulating pumps. The pressure devices are installed in lower and higher exchangers too. The fluid meter is installed on the lower heat exchanger side.

Basic specification of the heat pump:

1.	Cooling capacity	4.1 kW
2.	Heating capacity	5.4 kW
3.	Electromotor power	1.3 kW
4.	Main voltage	230 V
5.	Operating current	11 A
6.	COP	4.2–5.2
7.	Refrigerant	R407C
8.	Refrigerant working pressure P_{max}	2.3 MPa.
9.	Heat pump dimensions H × W × L	1400 × 750 × 750 mm
10.	Connections on primary and secondary sides	1″

The heat pump is operating automatically at a fixed temperature. The heating season started from October 9 and ended on March 31when the ambient temperature rises up to 14 °C in a local area. The soil collector is buried to a depth of about 1.5–1.8 m, loam soil gives 25–30 W/m^2 of heat. For calculation of the soil collector we used the methodical [1] and testing data used published in [2] KTU. Also presented are the testing data from [2]. The heated for room 4 persons was 60 m^2 for hot water heating; we lost 0.15 kW heat per person. The total quantity of the heat will amount 4·0.15 kW = 0.6 kW. Theoretical capacity of the HP was calculated 3.0 kW.

The HP scheme is shown in Fig. 1.

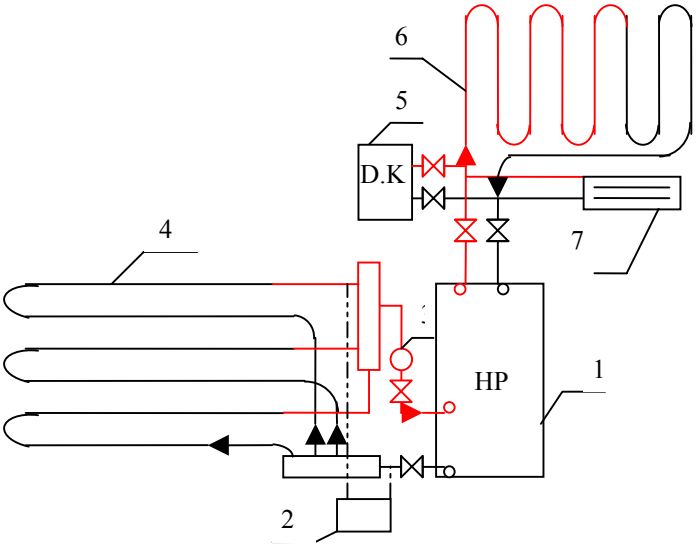

Fig. 1. The scheme of the heating system of the heat pump with a gas boiler and air heater: 1 – heat pump, HP, 2 – the temperature measurement block, 3 – fluid meter, 4 – soil loops, 5 – gas boiler, 6 – flor heating, 7 – air heater

The total heating capacity of the HP is 0.6 + 3 = 3.6 kW. We selected the nearest HP for 5.4 kW whose electrical power was 1.3 kW. The ground (soil) collector was calculated to yield FE = Q_K/q_E = 5400 W / 30 W = 180 m^2. The number of the soil loops needed are X = $2F_E/100$ = 2 × 180 m^2 / 3 loops = 120 m. The calculated length of the soil loops will be 120 m each. The soil collector pipes were made from Polythene PA and had the dimensions D32X3; In the inside of the soil collector pipes a fluid must circulate whose freezing temperature is -12 ºC. The total volume of the inside of the soil collector pipes and HP heat exchangers is ~ 200 liters. The flow resistance Δp in the soil collector was calculated to give $\Delta p = \lambda q v^2 l/2$ dekv (N/m^2), where $\lambda=0.316/Re^{0.25}$.

If Re > 4000 and if Re < 4000, $\lambda = 64/Re_{max}$ [2, 3].

THE HIGH TEMPERATURE SIDE

For floor heating the pipes were mounted that had the inside diameter of 12 mm, and the length – 190 m. The air heater SAMSUNG company was installed too and was connected to the HP heating system. The experimental data was registered once every 24 hours.

Measured were: the fluid temperature in the soil loops; the temperature of the room; the ambient temperature; the debit of the fluid m^3/h; the compressor motor working hours h, and the quantity of electricity in kW·h.

The pressure inside the soil collector and inside the floor heating system was 0.8–1.25 Bar. The temperature during working day inside the room was 18–22 ºC. The middle ambient temperature was -4.64 °C. The electricity consumption during the month of operation of the HP was 366 k W·h or 12 kW·h per day. The COP was 3.95 and was calculated to give COP(Qs 4.38kW + Qel.1.4888 kW) / 1.488 kW = 3.95.

Figs. 2 and 3 we can see the changes in the ambient temperature and in the soil temperature from 9 October 2007 to1 April, 2008.

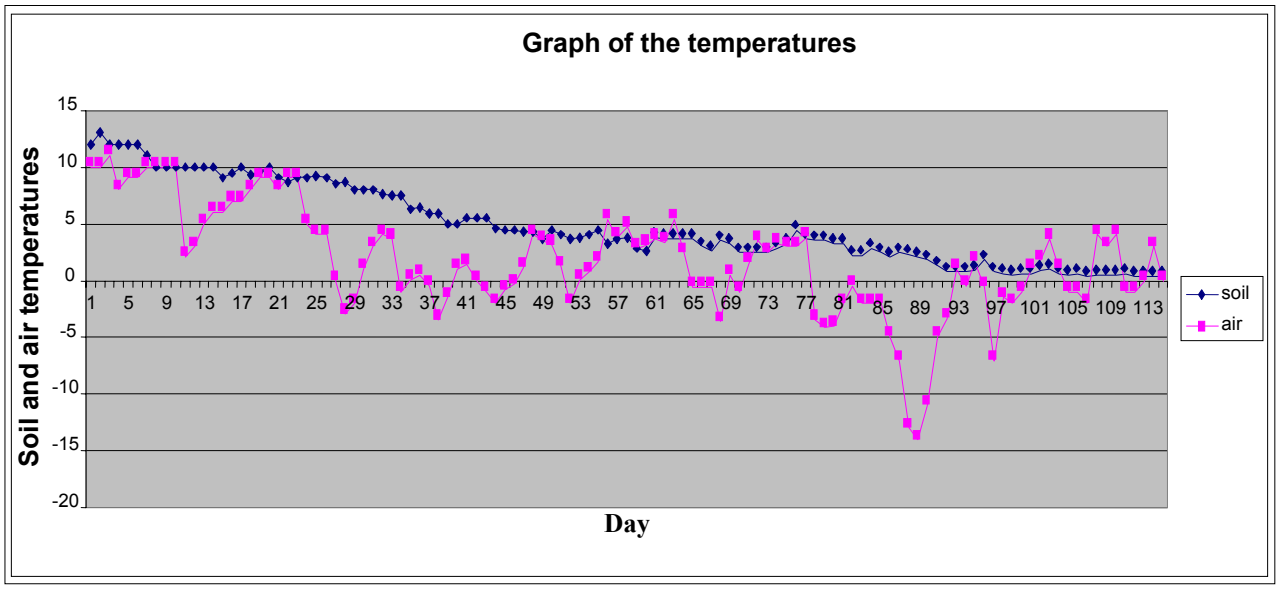

Fig. 2. Changes in the soil and air temperature from the beginning of the heating season up to 1 February [3].

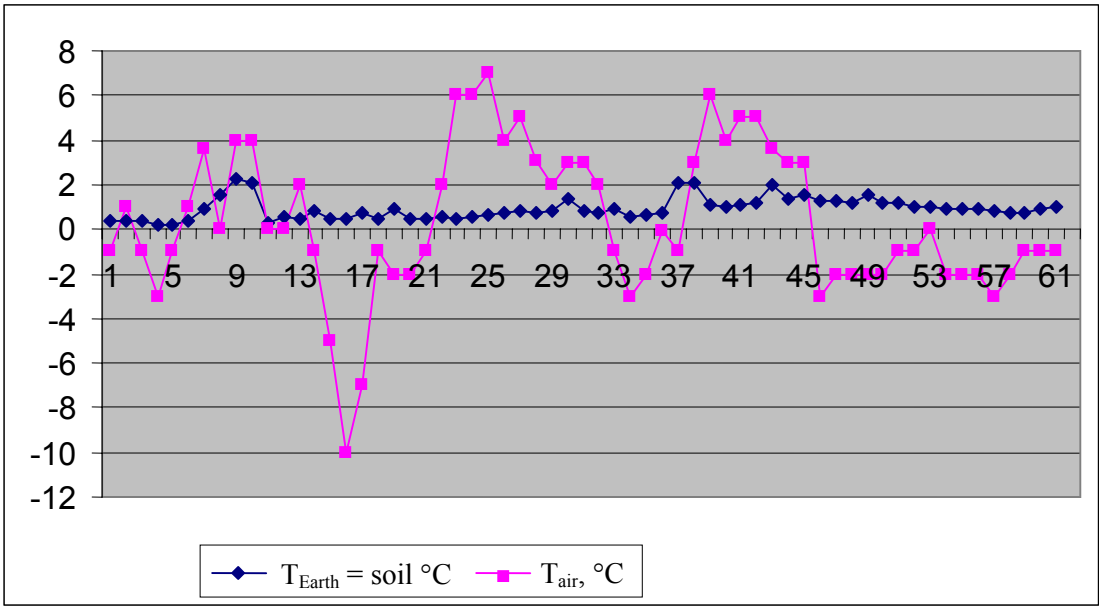

Fig. 3. Changes in the soil and air temperature from 1 February up to 1 April.

The tested house is located in the Kaunas region of Lithuania, with the HP being installed these.

When the heating of the house was started, we can see that the temperature of the soil was 12–13 °C and the ambient temperature at the sametime was 10–11 °C. (Fig. 2). The soil temperature decreases with time because the heat was taken off from the soil steadily. Fig. 2 shows the fluctuations of the temperature from October 9up to January 31 and Fig. 3 shows the temperature from February 1 up to 31 March, 2008. We draw your attention to the fact that the decrease in the temperature of the soil was not less than 0 °C. It shows that the soil and the fluid inside of the pipes which are buried in

the soil do not freeze. For weekend the HP was switched off the room temperature was not 20–22 °C, but 15-17ºC. For that reason the temperature of the soil started to rise by 1–2 °C.

The gas boiler heating

That we could compare the gas boiler (natural gas) and the HP heatings of the room, we installed a gas boiler in the HP-heated system. When the HP was washed, the gas boiler was switched off and reverse.

The wall gas boiler capacity is 24 kW. The middle ambient temperature was 1.12 °C and the lowest ambient temperature was 3.5 °C. The temperature inside the room was 18–22 °C.

GAS BOILER. The gas boiler used 40 m^3n of a gas through the heating season (188 days) used 188 · 6.7 m^3n = 1259.6 m^3n.

The stable part for gas taxes is 6.33 USD per month; it means that through a year we will pay 12·6.33 USD = 75.96 USD/year. The gas price depends on gas consumption. If we used 801m^3n per year, the price for 1m^3n is 0.3438 USD/m^3.

1259.6 m^3n · 0.3438USD/m^3n = 433.16 USD.

We add the stable part of the gas price and will calculate the heating price along the heating season: 433.16 USD + 76 USD = 509.16 USD. Then approximately along the season heating expanses will be 509.16 USD/6,1 month = 83.47 USD and we may calculate the heating price of the 1m^2 heating area: 83.47USD/60 m^2 = 1.39 USD. We would like to note that the gas boiler was operating for 12 h per day and was switched off from 18 h and switched from 6.5 h in the morning.

When the gas boiler operated without stopping, it used 9.8m^3n of gas it means that the 46 % more in comparison to when it was switched off from 18.30 up to 6.30 in the morning. The electrometer shows the quantity of the electricity consumed in kWh.

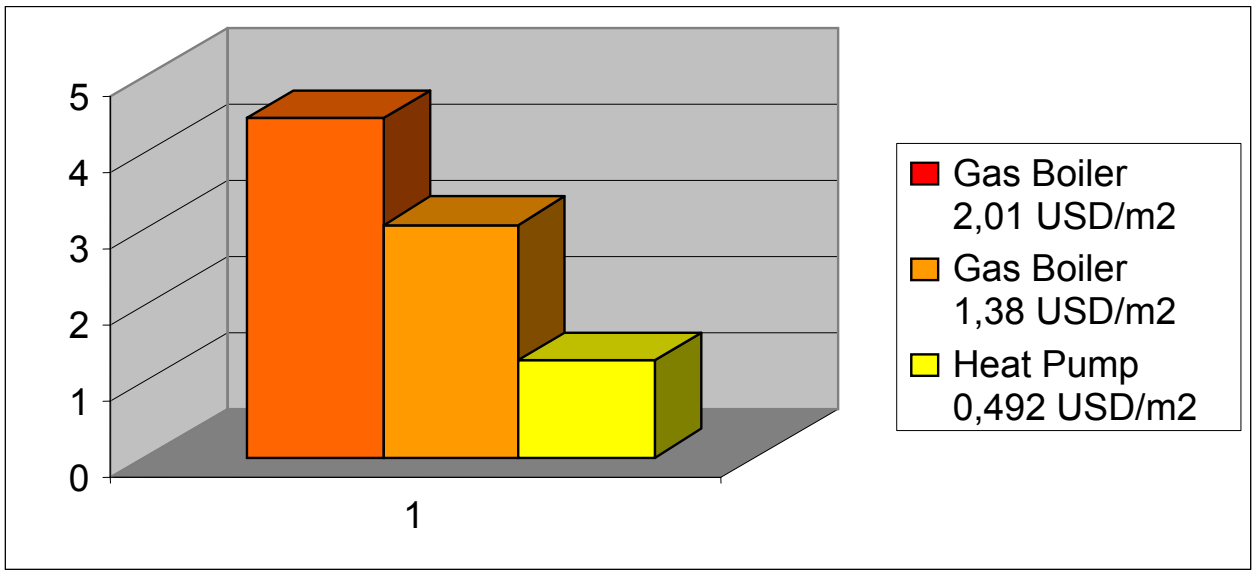

Fig. 4. The expanses of the gas boiler for heating the house (first and second columns from the left), and the heating expanses for the heat pump are shown in column on the right

The total price for the heating season is 1842.4 m^3n x 0.3438 USD/m^3n = 633,42 USD per season.

One kWh electricity price is 0.157 USD/kW·h. So we multiply the kWh by taxes and will know what we will pay for one m^2 heating through the month.

So 231 kW·h x 0.157 USD/kW·h = 36.26 USD or 36.26USD/60m^2 = 0.575 USD/m^2.

For comparison, the gas boiler expanses for heating we may to divide from HP expanses 2.01 USD/m^2/0.575 USD/m^2 = 3.49 time higher than the expanses for HP heating.

Fig. 4 shows the heating expanses for heating rooms by a gas boiler. The first column shows the expanses when the gas boiler was operating without stopping. And the second column – when the gas boiler was switched off for 11–12 h per night from about 18.30 up to 6.30 h.

From Fig. 4 we can to see that the HP heating expanses is 3.49 time less than in comparison to the gas boiler expanses for heating when the gas boiler is operating without stopping from 18.30 to 6.30 in the morning.

Acknowledgments

The author thanks the Neringa Burdulyte for the design of the paper.

CONCLUSIONS

1. We can see from the graphic material that the influence of the ambient temperature on the soil temperature is very small in winter time.
2. If the soil heat exchanger is designed and calculated very carefully, the temperature of the circulating fluid not falls down $0^{O}C$ along the heating season.
3. We can see from the testing data that the room heating by the gas boiler is 3.49 times more expansive by HP.
4. If we have a possibility of switching off the gas boiler or the heat pump for the night time we can to save a considerable part of the heating expanses.

References

1. Šilumos siurblių projektavimas. Germany: Viessmann, 2003.
2. Gimbutis G., ... and others. Šiluminė technika. Vilnius: Mokslas, Lithuania,1993.
3. Aleksandravičius T.A. Šilumos siurblio eksploatacijos duomenys // *Šilumos energetika ir technologijos 2008, Konf. pranešimo medžiaga. LEI, Kaunas, Lithuania*, 2008. 302 p.
4. Aleksandravičius T.A., Klementavičius A., Krakauskas M. Šilumos siurblių panaudojimo galimybės Lietuvoje. Vilnius, Lithuania, 1996.