MODIFIED EVAPORATIHG THERMOSIPHON

G.A. Krivonosov, I.N. Onishchenko, V.I. Volkov
NSC "Kharkov Institute of Physics and Technology"
Academic St. 1, Kharkov 61108, Ukraine
E-mail: onish@kipt.kharkov.ua

Abstract

For taking off heat from the intensively heated places, heat pipes or evaporating thermosiphons with small thermal resistance are used. However, existing conventional heat pipes of type T-1 in various modifications do not solve any problems as to thermal resistance. With the purpose of decrease of thermal resistance, it is suggested to separate the flows of steam and liquid by means of two coaxial tubes, and bubble boiling in evaporator is eliminated due to the small thickness of liquid in screw gap. In so doing the technology of manufacture of proposed modified evaporating thermosiphon (MET) is simplified and at all remains the same as one of heat pipe T-1. The of thermal resistance of the heat pipes executed on the basis of MET in comparison to heat pipes T-1314 and T-1615, executed on the basis of heat pipes T-1, decreased on the average by 2.5 times. Here are presented the examples of the possible usage of MET in the devices of the residential use: towel dryer, the installation on heating of apartments, desiccators, and so on.

KEYWORDS

Heat pipe, evaporating thermosiphon, thermal resistance, towel dryer, desiccator

INTRODUCTION

One of the most economical methods of transmission of the abundant amounts of heat from high power thyristors, used in a high-voltage apparatus, is heat removal owing to evaporation and condensation of working liquid in the closed volume. At present for maintenance of the set temperature condition of heat-generating elements the various constructions of low temperature heat pipes and thermosiphons are known [1-3]. Application of temperature regulation of similar devices in active part of the systems allows in a great part to reduce their mass-dimension sizes and costs of manufacture and to enhance reliability of electrical engineering devices.

For cooling of high power thyristors, is successfully used the heat removal based on heat pipes of types T-1314 and T-1615 [1] with thermal resistances of 0.08 and 0.05 ^{0}C/W, respectively. However during long exploitation their characteristics take the limiting permissible values, which reduces the reliability of work of the installation as a whole. Nothing more than increase of the number of heat pipes results in growth of mass-dimension characteristics of electrical engineering device. Application of evaporating thermo-siphons whose cost is less than cost of thermal pipes is also unpractical, because their thermal resistance is considerably higher. It should be noted that both heat pipes and evaporating thermo-siphons are characterized by opposite flow directions of steam and liquid, which results in their interaction on the surface of phases separation. Here the flow of steam captures the drops of the condensed liquid and carries them along the flow. This parasite circulation of heat carrier results in limitation of heat transmission and in increase of thermal resistance, so-called hydrodynamic limitation [4].

To overcome the hydrodynamic limitation in a vaporizer [5,6], the flows of steam and liquid are in different channels. By this way the thermal resistance of heat pipe decreases, however its mass-dimension parameters increase. In work [7], the description of heat pipes of types of M-I-77 and M-I-83 with capillary valve and separate ways for steam and liquid has been presented. The separation of ways for steam and liquid is realized by formation of channels in the porous structure for the steam flow, and the liquid flow passes through the porous structure. However, on the of separation of phases, the steam and liquid flows have opposite directions, so that hydrodynamic limitation is not overcome. Besides, manufacturing of porous capillary is difficult and is not technological for mass production, which is reflected on the increase of cost of

In this presentation, are described the construction and simple technology of manufacturing of MET,

where to overcome hydrodynamic limit, the flows of steam and liquid are separated by means of two coaxial tubes and bubble boiling is eliminated due to small thickness of liquid in screw gap. Different variants of implementation of heat pipes on MET base are shown, comparison of thermal resistances of conventional heat pipes and heat pipes performed on the basis of MET is made. Some examples of MET applications for manufacturing of the devices of everyday family life are also presented.

CONSTRUCTION OF MET.

In Fig. 1, the transversal section of modified evaporating thermosiphon MET is . On the internal surface of heat receiver 1 an incomplete screw-thread is cut with step of 1.5 mm. By this screw-thread, a cartridge 2 is screwed, on the external surface of which an incomplete screw-thread is cut with step of 1.5 mm. Area 3 between heat receiver 1 and cartridge 2 serves as a channel for the flow of steam condensate and cavity for the evaporating .

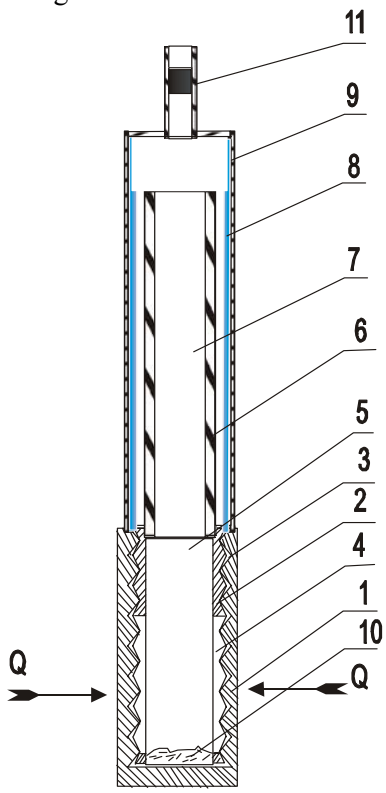

Fig. 1. Transversal section of modified evaporating thermosiphon MET

In part of cartridge opposite to the place of intensive influx of heat Q from the internal surface of heat receiver, the radial channels 4 are made for the passage-way of steam from the evaporator into central hollow part 5 of cartridge 2. In the butt-end of cartridge, the thin-walled pipe 6 is inserted, where steam 7 moves, and liquid 8 flows down along the internal surface of casing 9. All details of MET are made from copper and soldered by copper-phosphoric solder. In an internal cavity of MET working liquid (in this case, distilled water) is placed. The liquid was determined so that in the most limit regime of MET a puddle 10 was minimum. Vacuum pumping-out of completed MET was carried out by the following way. In vertical position of MET the heat receiver 1 was placed in a refrigerator with a temperature 2-3 ^{0}C below zero. As time passes, when the puddle will be frozen, pumping-out of air through the branch pipe 11 was carried out to pressure 10^{-2} mm Hg. Then branch pipe 11 was hermetically closed for some time, heat receiver 1 was heated to temperature 50-60 ^{0}C and this temperature of MET was maintained about 10-15 minutes (process of air outlet from the volume of liquid). Further heat receiver was again placed in the refrigerator, and pumping-out of the released air from liquid was repeated. As far as pressure 10^{-2} mm Hg was achieved, the branch pipe 11 was gripped and soldered.

To compare the thermal characteristics of MET, on basis heat pipes were made similar to the heat pipes of type T-1314 and T-1615, performed on the basis of heat pipe T-1. The overall of MET were taken equal to ones of T-1.

TECHNOLOGY OF MAKING

For obtaining the characteristics of heat pipes based on MET, a stand was made. As a source of heat, electric stove was made with minimum loss of heat in an external environment. Thermocouple was mounted in the body of heat receiver. U part of MET, i.e. of steam condenser, was placed in a refrigerator with running water. Temperatures of cold input water and warm output water were measured by a mercury thermometer TL-4. The of running water was measured too. From measured data of voltage, current, thermocouple readings, temperature of input and output water and its of thermal resistances for the heat pipes were . They lay from 0.026 ^{0} to 0.023 ^{0}C/W at thermal power from 500 to 2300 W. Temperature of condensation was equal to 41-45 ^{0}C and temperature of vaporizer came out to 53-100 ^{0}C. These values showed that thermal resistance of heat pipes based on MET heat pipe are, on the average, 2.5 times less than thermal resistance of conventional heat pipes T-1314 and T-1615. The cost of such untraditional heat pipes based on MET did not exceed the cost of traditional heat pipes T-1314 and T-1615.

In Fig. 2, some variants of the heat pipes executed on the basis of heat pipes of type MET are presented.

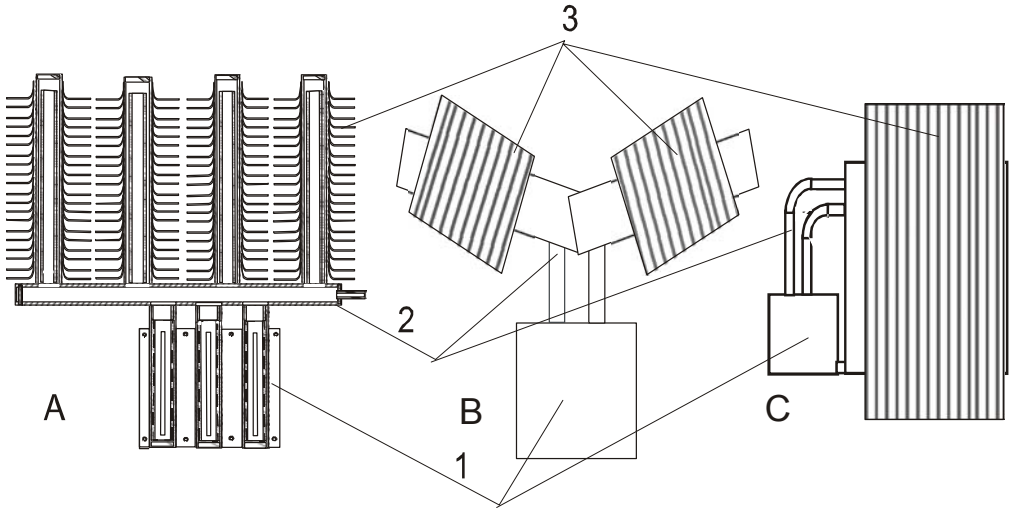

Fig. 2. Some variants of heat pipes based on heat pipes of type MET. A- cross-section of heat pipe, B and C- contours of heat pipes, 1- heat receiver, 2-channels for liquid and steam, 3- radiator

SOME EXAMPLES OF MET APPLICATION

Thermosiphons improved in this way were successfully applied in the following devices. During work of ion source in charge particle accelerators, produced heat exceeds 1 kW. This heat must be taken from the limited volume which is supplied by high electric potential. Traditionally, such the of heat is taken by running water using centrifugal pump, and the pump is isolated from the source of heat by means of dielectric waveguide. The heated water is pumped over in a reservoir for its cooling. For providing reliability of accelerator work this installation requires a frequent prophylaxis. Application of heat pipe of untraditional construction based on MET enhanced reliability of work of accelerating technique, decreased expenses of its service, released from some mechanisms, in particular centrifugal pump.

For solving some everyday domestic life tasks, heat pipes of type MET of some modifications can also take be used (Fig. 3). Using pipes made from stainless steel, bending them properly and placing part of MET in bottom, we made towel dryer, heater of apartments, dryer for shoes. The devices for the domestic setting are characterized by the quick heating over all surface and effective heat irradiation.

Property of heat pipe to hold constant temperature over all surface and absence of local places of overheat were used for manufacturing of device for drying of vegetables and fruits. The peculiarity of process of drying of vegetables and fruits is that they are abundantly supplied with moisture (80%), and it is necessary to evaporate it at temperature of no higher than 700C and to exclude an overheat in the places of touching of objects of drying with the surface of heater. All these conditions must be fulfilled for conserving vitamin C in the dried products [8]. In this process, it has been also possible, with the help of heat pipe, to recuperate heat and to collect moisture. The collected moisture contains aromatic compounds in abundance (especially in drying of garlic). Recuperation of heat by the heat pipe of type MET decreased the power input for the process of drying by one half.

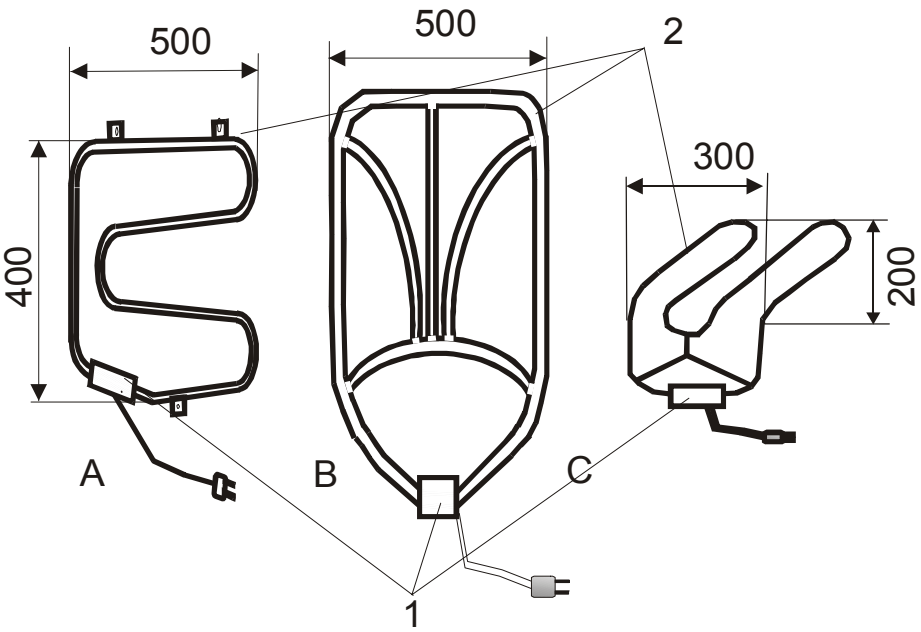

Fig. 3. Heat pipes in the devices for everyday family life: A-towel dryer, B-heater of apartments, executed as a decorative grate on a window, C-dryer for shoes. 1-electric heater with thermoregultor, 2- channels for the flows of liquid and steam.

We will especially call attention to possibility of application of heat pipes of type MET in manufacturing of crockery, for example, pans of various sizes for preparation of liquid food. In the pans of such construction, the bottom is performed as a heat pipe of type MET, so the temperature of internal surface of bottom does not exceed 120-130 ^{0}C. In a number of cases (e.g. for milk boiling), this is of principal importance.

CONCLUSION

Original construction of modified evaporating thermosiphon with a capillary valve and separate channels for steam and liquid is expounded, technology of manufacturing is described, thermal resistances are compared, and some possible variants of MET application in the domestic life are presented.

References

1. Tech. Usloviya Belarus SSR 020-87.
2. Kovalev S. A., Solovev S. A. Evaporation and condensation in heat pipes. Ed.Science 1989. Pp. 47-79.
3. Gerasimov Yu. F., et al. Low temperature heat pipes with separate channels for steam and liquid // *EPJ*. 1975. Vol. 26. № 6. Pp. 957-960.
4. Shanovski M. N. et al. Physical basis of heat pipes // Ed. Atomizdat 1978. Pp. 17-18
5. Steriger F. J. Experimental Study of Woter-Filled Capillary-Pumped Heat Transfer Loops // NASA TM X-1310. NFSFLewis Research Center, Cleveland, Ohio. 1966.
6. Fedorov V. N., Sanin V. Ya., Tyurin N. E. Research of heat transmission in a vaporizer with the capillary-porous insertion of two-channel thermal pipe.// *Thermophysics and hydrodynamics of processes of boiling and condensation: Abstracts. Riga, Polytechnic institute Riga* 1988. P. 110.
7. Koshkin Yu. B., Kulakov A. G. *Capillary valve from a porous aluminium in heat pipes with separate channels for steam and liquid,* book Heat pipes. 1992. Pp. 36-43.
8. Zablotski R. V., Granovskaya R. Ya. *New in technology of drying of vegetables*, Review, Moscow 1970. Pp. 4-70.