POSSIBILITIES OF IMPLEMENTATION OF ABSORPTION HEAT PUMP IN REALISATION OF THE CLAUSIUS-RANKINE CYCLE IN GEOTHERMAL POWER STATION

Władysław Nowak, Aleksander A. Stachel, Aleksandra Borsukiewicz-Gozdur
Department of Heat Engineering
Szczecin University of Technology,
al. Piastów 17, PL 70-310 Szczecin, Poland
tel.: (++4891) 449-42-72, fax: (++4891) 449-45-91, e-mail: andrzej.stachel@ps.pl

Abstract

The topic of utilization of geothermal power for heating purposes in Poland is relatively well known, which is justified by the fact of a number of operating geothermal power plants and some other installations in advanced design stage. Geothermal energy utilization projects for production of electricity are also under development. The results of one of such analysis, regarding the correctness of construction and operation of a binary geothermal power plant in combination with the heat pump, supplied by heat water with low enthalpy, has been discussed in the present paper.

KEYWORDS

Geothermal energy, utilisation of geothermal energy, binary power plant, heat pump.

INTRODUCTION

Geological examination of geothermal waters in Poland and potential resources of energy contained there have been extensively discussed in numerous papers [4, 5, 9]. Such resources are relatively evenly distributed across the majority of Polish territory and are found in selected geothermal basins and sub-basins belonging to specified provinces and geothermal regions. It follows from hydrogeological examinations that over 90 % of underground water resources are placed in the Polish Lowland region in the Polish part of Central Europe geothermal province [5, 9].

The geothermal power utilization in Poland for heating purposes is relatively well recognized. It is supported by the fact of operation of six geothermal power plants as well as a large number of new investment plans underway. Advanced geothermal energy utilization activities for electricity production are also conducted [7, 8, 10].

The analysis of binary power station operation is presented below. Analyzed power station is combined with the heat pump and is supplied by the geothermal flow of water with low enthalpy. Obtained results of investigations can help to analysis the operation effectiveness of postulated concepts for binary power station and to determine the operation conditions. Possibilities of implementation of working fluids from the point of maximal effective utilization of geothermal energy were also analyzed.

GEOTHERMAL POWER PLANT

Geothermal water can be used for supplying not only the geothermal thermal plants but also for supplying power and heat & power stations. In all cases different installation designs has to be realized. However, in cases when temperatures of geothermal water are not elevated, the units for municipal water temperature increasing has to be incorporated within the installation such as boilers, absorption heat pumps or the thermal-electric appliances.

Two different designs of geothermal heat and power stations combined with the absorption heat pump have been analyzed.

In the first design (Fig. 1) municipal water $\dot{m}_{sw}$, is heated in the geothermal heat exchanger GHE, and is directed to the absorption heat pump AHP, where it flows through AHP absorber. The condenser temperature is increasing as a result of useful heat absorption. The lower heat source for AHP is the water flow $\dot{m}_{dd}$, which circulates in the system. The system consists of the heat pump evaporator and condenser of working fluid for low-temperature Clausius-Rankine cycle case. The driving energy for AHP is a high temperature boiler HTB-1.

Next, the municipal water is directed to the heat exchanger HE-2, where it causes flow evaporation of low-boiling point fluid $\dot{m}_n$, circulating in the Clausius-Rankine cycle. In this design there is a possibility of municipal water temperature increasing in the auxiliary boiler PB-2. Municipal water, after giving away its heat during the evaporation process, is partly directed to the heat exchanger HE-1 ($\dot{m}_{sw1}$), where the process of heating of the low-boiling point fluid is taking place. The process is carried out until evaporation temperature is reached. The remaining part of municipal water $\dot{m}_{sw2}$ is directed to the heat consumers (receivers). The municipal water flows from the heat consumers and the heat exchanger HE-1 reconnect and are directed to the geothermal water heat exchanger GHE, where temperature of municipal water is increased due to heat exchange with the geothermal resource.

The low-boiling point fluid circulates in the low-temperature cycle of a power plant. The plant operates by the C-R cycle. After isobaric heating in the heat exchanger HE-1 and evaporating in the evaporator HE-2, the fluid proceeds to the turbine, where it adiabatically expands and performs work at the same time. The expanded steam of the working fluid, after its pass through the heat exchanger HE-3, is directed to the condenser connected with the heat pump evaporator. Condensed fluid is pumped by means of the circulation heat pump to the heat exchanger HE-1.

In the considered design, for the sake of reduction of condensation temperature of low-boiling point circulation fluid (which is linked to the increase of the Clausius-Rankine cycle efficiency), the calorific value is being used in the heat pump evaporator.

In the considered case the important parameters to be determined are the flowrates of low-boiling point fluid in the Clausius-Rankine cycle. The values of the flowrates ($\dot{m}_{n1}$, $\dot{m}_{n2}$) can be determined from the re-arranged heat balance equation for the heat exchanger HE-2 (evaporator) and the balance equation for the system of condenser of low-boiling point fluid and the evaporator AHP. From the presented scheme it is important that the equality condition must be fulfilled $\dot{m}_{n1} = \dot{m}_{n2}$.

However, calculated from adequate balances equations flowrates of low-boiling point fluids are not equal and usually $\dot{m}_{n1}$ is greater than $\dot{m}_{n2}$. Therefore, in the system presented in Fig. 1 a bypass line is presented, by means of which the part of municipal water from the heat pump can be removed directly to the heat receivers, through reduction of the flowrate of municipal water supplied to the heat exchanger HE-2 (evaporator), rendering reduction of the flowrate $\dot{m}_{n1}$ so that to achieve the condition $\dot{m}_{n1} = \dot{m}_{n2}$.

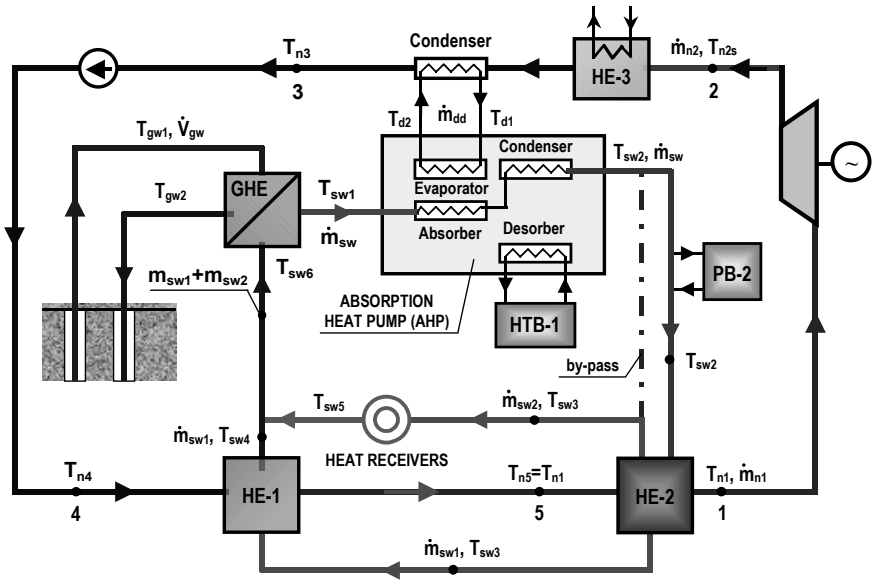

Fig. 1. Schematic of the two-fluid heat and power station with implementation of heat pumps, in the case of low-boiling point fluid transferring heat to the heat pump evaporator

In the case of the second design (Fig. 2), municipal water $\dot{m}_{sw}$ increases its temperature due to heat exchange with the useful heat from the absorption heat pump and is directed to the heat exchanger HE-2 to evaporate the low-boiling point fluid. After decrease of its temperature, due to removal of heat, part of the municipal water flow $\dot{m}_{sw1}$ is directed to the heat exchanger HE-1 with the purpose to heat the low-boiling point fluid. On the other hand, the second flow of municipal water $\dot{m}_{sw2}$ is directed to the heat receivers.

In such case, in relation to the ratio between the flowrate of municipal water $\dot{m}_{sw2}$ and the flowrate directed to the absorption heat pump evaporator $\dot{m}_{dd}$, three variants can be considered: case 1 when $\dot{m}_{sw2}$ is greater than $\dot{m}_{dd}$ and cases 2 and 3 where $\dot{m}_{sw2}$ is smaller than $\dot{m}_{dd}$.

Case three is different from the case two due to the fact that there has been presented additional heat exchanger HE-4, which provides municipal water temperature reduction to obtain corresponding temperature and required flowrate of municipal water at inlet to the heat pump evaporator.

In the considered variants of case two the part of municipal water is directed to the evaporator AHP, where reduction of municipal water takes place. Subsequently, the flowrate of municipal water from the heat pump evaporator together with the flowrate of municipal water from the heater (HE-1) are recombined with the flowrate of municipal water received from the heat receivers. All three flowrates are directed to the geothermal heat exchanger GHE, where due to heat transfer with geothermal water the increase of municipal water temperature takes place.

Schematics illustrating principles of operation of three subsequent variants of the second case of a heat and power station have been presented in Figures 2, 3 and 4.

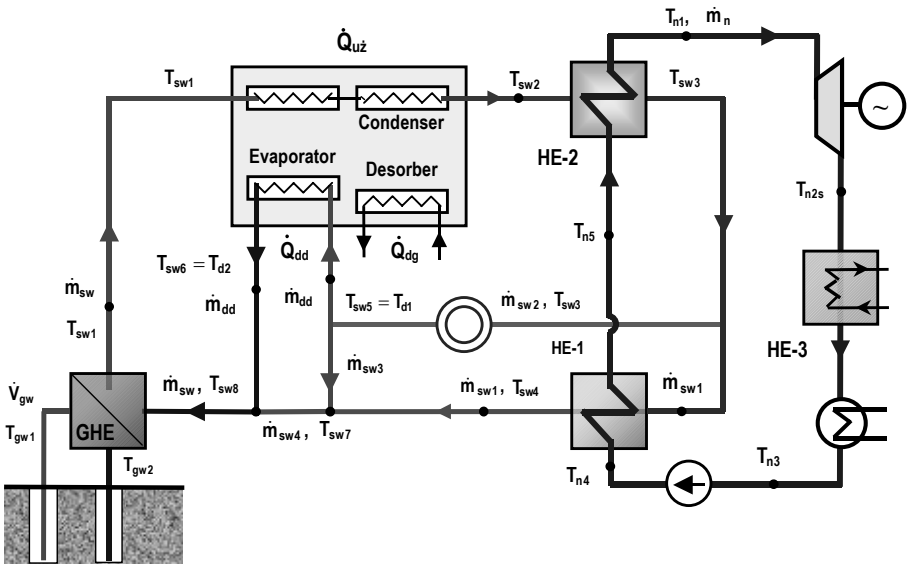

Fig. 2. Schematic of a two-fluid geothermal heat and power station, where municipal water flows through the condenser and evaporator of the heat pump and the inequality $\dot{m}_{sw2} > \dot{m}_{dd}$ takes place (case 1)

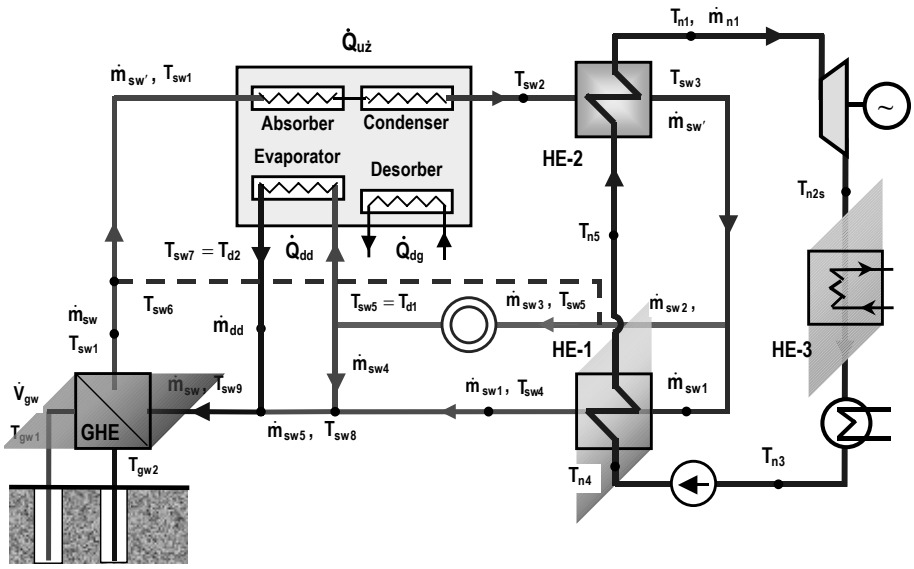

Fig. 3. Schematic of a two-fluid geothermal heat and power station, where municipal water flows through the condenser and evaporator of the heat pump and the inequality $\dot{m}_{sw2} < \dot{m}_{dd}$ takes place (case 2)

In the cases considered in the paper the absorption heat pump made by SANYO has been used, of which a general schematic is presented in Fig. 5.

Performed calculations in the part referring to the low-temperature C-R cycle have been realised with respect to the low-boiling point liquids belonging to the so called B group encompassing such fluids as: R600a, R227 and R124, which are characterized by the fact, that the process of steam expansion in the turbine, which starts at the saturation line, continues and terminates in the superheated steam region [1, 2]. The C-R cycle in the lgP–h diagram for the case of low-boiling point liquids from the group B has been presented in Fig. 6.

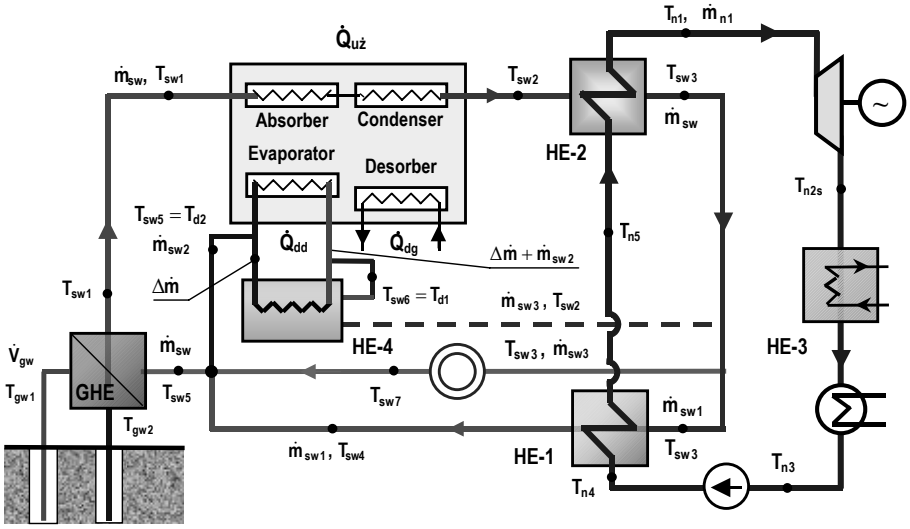

Fig. 4. Schematic of two-fluid geothermal heat and power station, where municipal water flows through the condenser and evaporator of the heat pump and the inequality $\dot{m}_{sw2} < \dot{m}_{dd}$ takes place – case 3

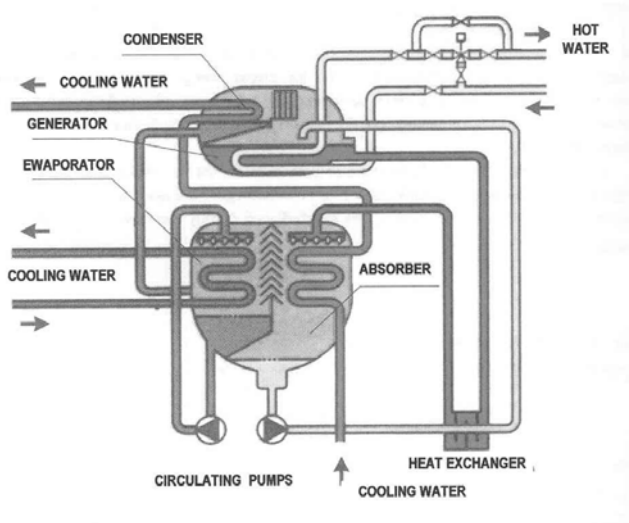

Fig. 5. Schematic of absorption heat pump made by Sanyo [9]

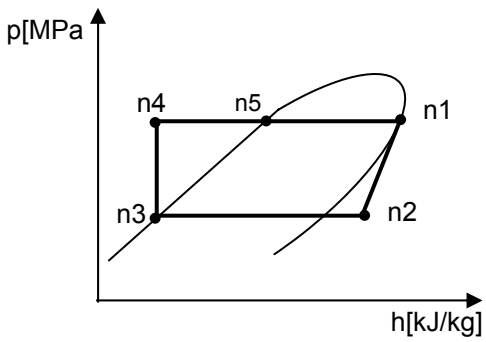

Fig. 6. Diagram of fhe C-R cycle in lgP-h coordinates for low-boiling point fluids from B group

In the case of analyzed schematics of geothermal heat and power stations temperature distributions in particular heat exchangers (installation nodes) have been presented in Figures 7, 8, 9 and 10, for the cases where temperature and flowrate of geothermal water are equal to $T_{gw1} = 42^{\circ} C$, $\dot{V}_{gw} = 50\, m^3/h$.

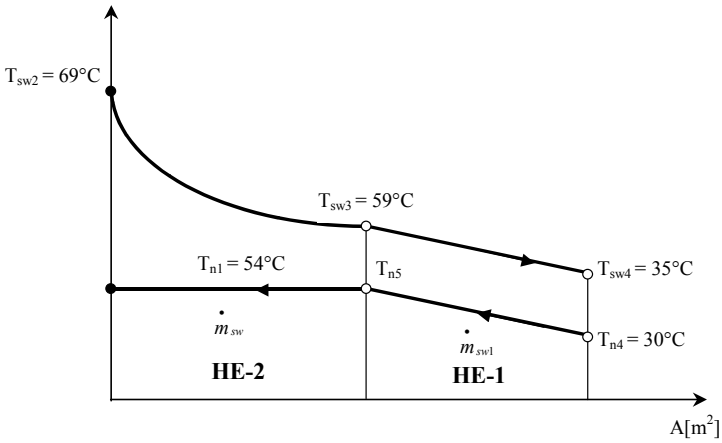

Fig. 7. Temperature distributions of working fluids in the low-boiling point fluid cycle with saturated steam

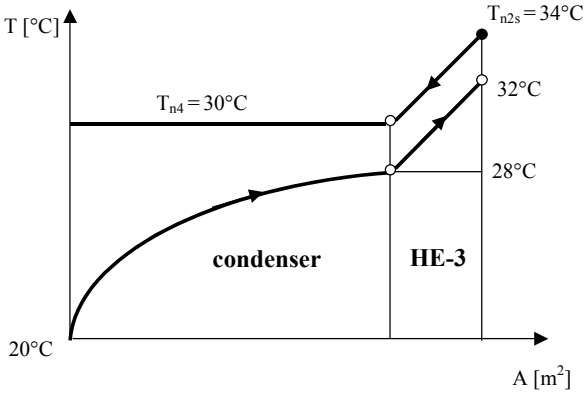

Fig. 8. Temperature distributions in the condenser and the heat exchanger HE-3, where cooling of the low-boiling point fluid by the cooling medium takes place, for example water

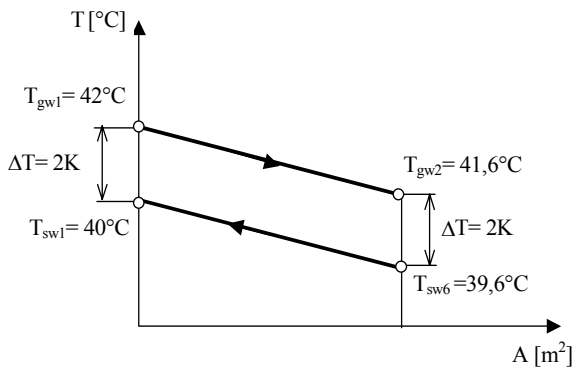

Fig. 9. Temperature distribution in the geothermal heat exchanger for $T_{sw6} = 39{,}6°C$

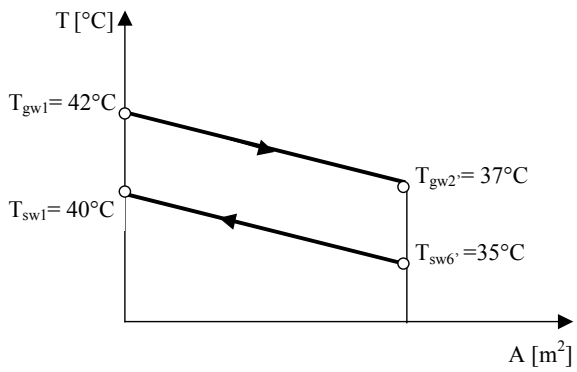

Fig. 10. Temperature distribution in the geothermal heat exchanger for $T_{sw6'} = 35°C$

FUNDAMENTAL RELATIONS USED IN CALCULATIONS

Calculations of thermal-hydraulic processes in all considered in the paper cases of the heat and power stations have been conducted using the relations presented below, according to the needs:

- Energy balance equation for the heat pump:

$$\dot{Q}_{dd} + \dot{Q}_{dg} = \dot{Q}_{uż}, \tag{1}$$

where:

$\dot{Q}_{uż}$ – rate of useful heat, due to which municipal water increases its temperature,

$\dot{Q}_{dd}$ – rate of heat supplied from the lower heat source,

$\dot{Q}_{dg}$ – rate of driving heat supplied to the heat pump by means of hot water.

The equation for energy balance (1) has been used, amongst the others, in determination of values of temperature of municipal water beyond AHP, which can be determined on the basis of useful heat from the re-arranged relation for the rate of acquired heat by the municipal water in the heat pump.

– Energy balance equation for the heat exchanger HE-2 (evaporator):

$$\dot{Q}_{WC-2} = \dot{m}_n r = \dot{m}_{sw} c_{psw} \left(T_{sw2} - T_{sw3}\right). \tag{2}$$

– Energy balance equation for the geothermal heat exchanger:

$$\dot{Q}_{WG} = \dot{V}_{gw} \rho_{gw} c_{pgw} \left(T_{gw1} - T_{gw2}\right) = \dot{m}_{sw} c_{psw} \left(T_{sw1} - T_{sw6}\right). \tag{3}$$

At the condition of the equality of the rates of thermal capacities of geothermal water and municipal water $\dot{W}_g = \dot{W}_s$ that means that $\dot{V}_{gw} \rho_{gw} c_{pgw} = \dot{m}_{sw} c_{psw}$.

– Equation of energy balance for the condenser of low-boiling point fluid and evaporator of heat pump:

$$\dot{Q}_{dd} = \dot{m}_{n2} \left(h_{2s} - h_3\right). \tag{4}$$

– Equation of energy balance for the heat exchanger HE-1:

$$\dot{Q}_{WC-1} = \dot{m}_n c_{pn} \left(T_{n1} - T_{n4}\right) = \dot{m}_{sw1} c_{ps} \left(T_{sw4} - T_{sw3}\right). \tag{5}$$

– Rate of useful heat in the heat pump:

$$\dot{Q}_{uż} = \dot{m}_{sw} c_{psw} \left(T_{sw2} - T_{sw1}\right). \tag{6}$$

– Efficiency of the Clausius-Rankine:

$$\eta_{C-R} = \frac{l_{C-R}}{q_d} = \frac{h_1'' - h_{2s}}{h_1'' - h_3'}. \tag{7}$$

– Power of the Clausius-Rankine cycle:

$$N_{C-R} = \eta_{C-R} \dot{m}_n \left(h_1'' - h_3'\right). \tag{8}$$

CONCLUSIONS

In the event of the first case there is a possibility of Clausius-Rankine cycle efficiency increasing as a result of simultaneous condensation temperature reduction and the evaporation temperature increase of the low-boiling point fluid. That follows from the analysis presented in the paper [1], that the increase of efficiency of the C-R cycle can be achieved by the upper reservoir temperature increase and/or lower reservoir temperature reducing. The reduction of lower reservoir temperature by certain amount of heat there is achieved a larger efficiency increase than in the case of increasing of temperature of the upper source by the same amount of heat. The utilization of a appropriate heat pump can provide increased temperature of the upper heat reservoir and reduced temperature of the lower heat reservoir at the same time. It leads to the heat and power plant efficiency and power generation increase. For the effect to be beneficial and considerable the heat pump must be selected in such a way that the flowrate of low-boiling point fluid $\dot{m}_{n2}$, resulting from the condenser balance equation of the Clausius-Rankine cycle, is large enough and approaching to value of the flowrate of low-boiling point fluid $\dot{m}_{n1}$, determined from the evaporator balance equation.

In the event of the second case (II) the part referring to the Clausius-Rankine cycle, the turbine of which drives the generator of electricity is the same for all three analyzed situations. These results

have been presented analytically in figure 11. The influence of temperature on the efficiency η_{C-R} and power $N_{C=R}$ of the C-R cycle for the municipal water flowrate of $\dot{m}_{sw}$, corresponding to the geothermal water flowrate $\dot{V}_g = 50\,m^3/h$, if condensation temperature is 27 °C, for selected low-boiling point fluids from the B group in the case number two and all three variants have been presented in these figures.

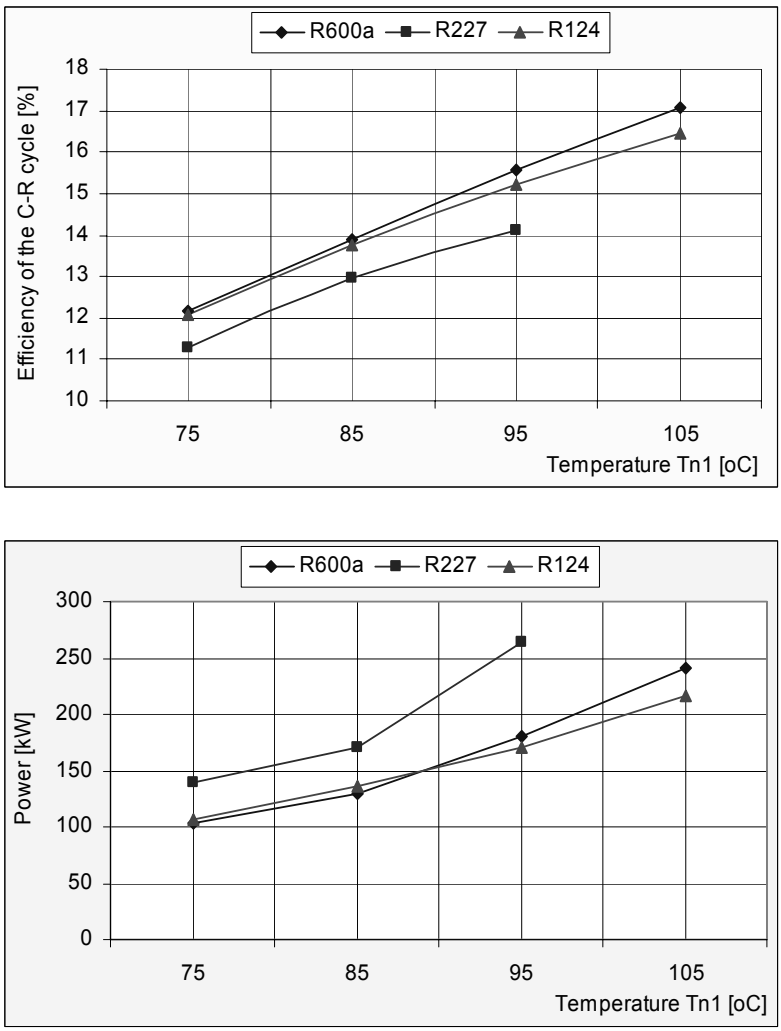

Fig. 11. Presentation of the results of research for the analysed cases of the heat and power station (for condensation temperature 27 °C)

The main difference corresponds to the effectiveness of utilization of energy for supplying heat consumers and it is related to a different effectiveness of geothermal energy utilization.

It results from the conducted analysis that utilization of heat pump for production of electricity is justified in the case of heat and power station. Also utilization of waste heat for consumers or/and for central heating purposes positively influences on the operation effectiveness.

Acknowledgement

The work has been carried out in the frame of the project 4T10B/026/25 financed by the Polish Ministry for Science and Information Technology

Selected nomenclature

c_p - specific heat, J/gK
h - enthalpy, J/g
$\dot{m}$ - flowrate, g/s
N - power, W
$\dot{Q}$ - rate of heat, J/s
r - latent heat of evaporation, J/g
$\dot{V}$ - volumetric flowrate, m^3/s
η - efficiency

Subscripts:
n - refers to low-boiling point fluid
sw - refers to municipal water
g - refers to geothermal water
wc - refers to heat exchanger

References

1. Angelino G., Colona di Paliano P. Multcomonent Working Fluids for Organic Rankine Cycles // *Energy*. 1998. Vol.23, No. 6. Pp. 449-463.
2. Bonca, Z., et al.: *Handbook – Refrigeration fluids and heat carriers*, IPPU Masta, 1998.
3. Górecki W.: *Atlas of resources of geothermal energy on the Polish Lowland*, Wyd. Tow. Geosynoptyków GEOS , Geosynoptics Society GEOS Publishers, Kraków 1996.
4. Sokołowski J.: *Methodology of assessment of geothermal resources and conditions of their presence in Poland*, Notes of the Polish Geothermal School, 3rd Course, PGA and CPPGSMiE PAN Publishers, 1997.
5. Sobański R., Nowak W. Geothermal energy in Poland // *International Seminar Contemporary Problems of Thermal Engineering, Gliwice-Ustroń, Poland.* 1998.
6. Nowak W., Borsukiewicz-Gozdur A. Duales Heizwerk gespeist mit einem geothermalen Wasser einer mittleren Entalpie // *Start in eine neue Energiezukunft, 1 Fachkongress Geothermischer Strom, Neustadt-Glewe*. 2003.
7. Nowak W., Borsukiewicz-Gozdur A. Binary geothermal power plant with absorption cooler // *XIV Int. Tagung Forschung, Didaktik und Praxis im modernen Maschinenbau, Stralsund* 2004.
8. Stachel A.A., Nowak W. and all. Assessment of overall effectiveness of power station and binary power station utilizing geothermal water with average enthalpy // *Grant Polish Ministry of Scientific Research and Information Technology, Szczecin, Poland*. 2003.
9. Nowak W., Sobański R., Kabat M., Kujawa T. *Systems of acquisition and utilisation of geothermal energy*, Wyd. Politechniki Szczecińskiej, 2000.
10. Nowak W., Borsukiewicz-Gozdur A. Analysis and assessment of the effectiveness of operation of binary power plant utilising geothermal water with a medium enthalpy // *Transaction of IFFM*. 2003. No. 114, Gdańsk.