PROSPECTS OF HEAT PIPES USAGE IN THE FISH INCUBATION DEPARTMENT

V.N. Dashkov, N.F. Kapustin, E.K. Snezhko
Belarussian-Scientific-Research Institute of Mechanization of Agriculture,
Minsk, Belarus
Tel. (375-17) 2662456, Fax (375-17) 2660291

Abstract

Our scientists worked out these waters heat disposal system with the application of split, easy to periodical cleaning work surfaces and of heat modules on the thermosiphon type heat pipes (THP) and inculcated it in the fish industry "Izobelino" in the Molodechno region. Application of sectional module on THP has secured workshop power inputs reduction during incubation period (3 cycles, 15 days each) on 15-25%.

Use of alternating volume radial oriented capacities, like silphons, rigid walls of which in the form of capillary-porous elements are moistened by the volatile thermofor and eccentric fixed manacle rings agent, mechanically connected with correspondingly opposite same walls of radial oriented capacities, leads to torque making by capillary forces resultant on eccentric manacle rings rotation axles during the thermofor vaporization from the capacities, situated in the power-supply zone. On the basis of given heat pipe we developed adjustable heat pipe in which eccentricity quantity and course automatically keep tracking all the changes of solar radiation flow intensity and directions.

KEYWORDS

Fish larvae incubation, utilized heat, module on the heat pipes, split frame, tube plate, power inputs reduction, heat-engine, transformer of solar energy, silphon, capillary-porow element, volatile thermofor, eccentric fixed manacle rings, adjustable heat pipe.

INTRODUCTION

Young fish reproduction and breeding plant method provides for early time constraints of fish larvae incubation and thereby artificial heating of vast body of running water up to required temperatures at 22-25˚C, which is on average 12˚C higher than Republic of Belarus ponds water temperature in the latter half of the April. Standard costs on 1 million of larvae going out come to more than 200 tones of warm water which have been heated with the help of boiler-rooms and electric heating units and after that was throwed out to the escape channel without extraction of pretreated water low-grade heat.

Our scientists worked out these waters heat disposal system with the application of split, easy to periodical cleaning work surfaces and of heat modules on the thermosiphon type heat pipes (THP) and inculcated it in the fish industry "Izobelino" in the Molodechno region.

Heat pipes class, in which thermofor return from the condensation zone to the vaporization zone (utility power zone) takes place during the rotation of heat pipe itself, stimulates doubtless interest in respect to efficient use of low-potential renewable energy sources in agro industrial department. In that case the pipe is working as heat-engine, for example: as transformer of solar radiation energy into mechanical work.

There are different variants of organization of thermofor condensate continuous transport into power-supply zone (at the expense of centrifugal, gravitational and other attractive forces) but one of the most promising is of thermofor itself capillary force usage.

APPLICATION OF SECTIONAL HEAT EXCHANGING MODULES ON THE HEAT PIPES FOR THE DISCHARGED WATERS LOW-GRADE HEAT UTILIZATION

The THP 102 in number, 27 mm in diameter and 2200 mm long thick with ammonia and fixed in its middle part on the tube plate with packed screw joints by way of corridor order were divided between themselves in the upper (cold) and lower (warm) compartments of the split frame bafflers

which secured THP work surfaces wash recurrence with warm and cold water counter-current flows and at the same time produced high heat-transfer effect (fig.1, 2, 3).Conducted workshop actual tests of the module on THP on the expenses from 1 to 3 liter/sec showed, that maximum efficiency (44%) corresponds to optimal outlay which is about 2 liter/sec, at the same time the temperature of water supplied to the workshop was rising from 14.6˚C to 17-18.5˚C depending on outlay. Temperature difference between “hot” and “cold” THP ends during all the test conditions were within 1.2˚C which met the requirements specification parameters for the module worked out by our Institute.

We haven’t needed additional capital workshop reequipment outlays for the present heat disposal system realization. The time of coming out to the working temperature condition has came to no more than 10-15 min. Application of sectional module on THP has secured workshop power inputs reduction during incubation period (3 cycles, 15 days each) on 15-25%.

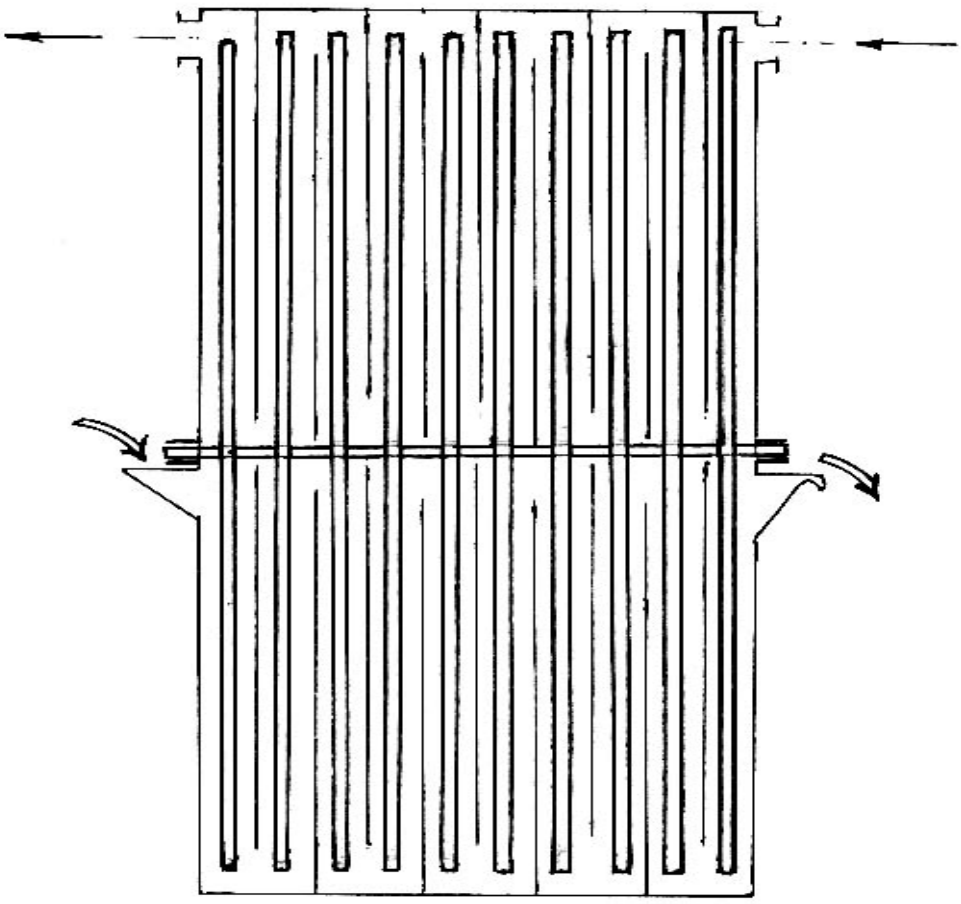

Fig.1. Warm and cold water counter-current flows

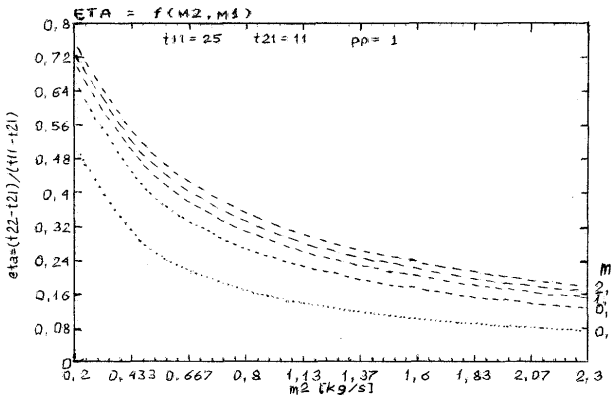

Fig.2. Heat – transfer effect of THP

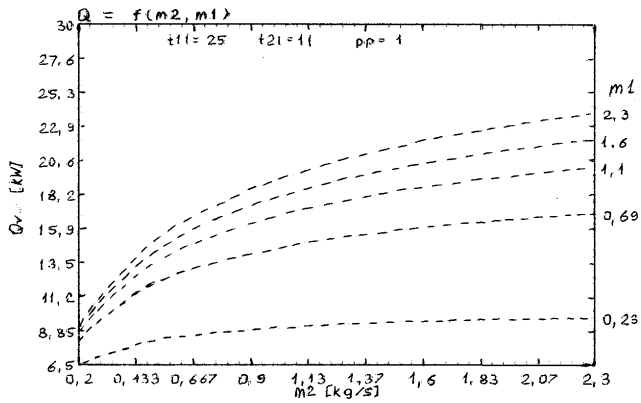

Fig.3. Heat – transfer flow intensity of THP

EFFECTIVE SOLAR HEAT-ENGINE

There are different variants of organization of thermofor condensate continuous transport into power-supply zone (fig.4) but one of the most promising is of thermofor itself capillary force usage (fig.5).

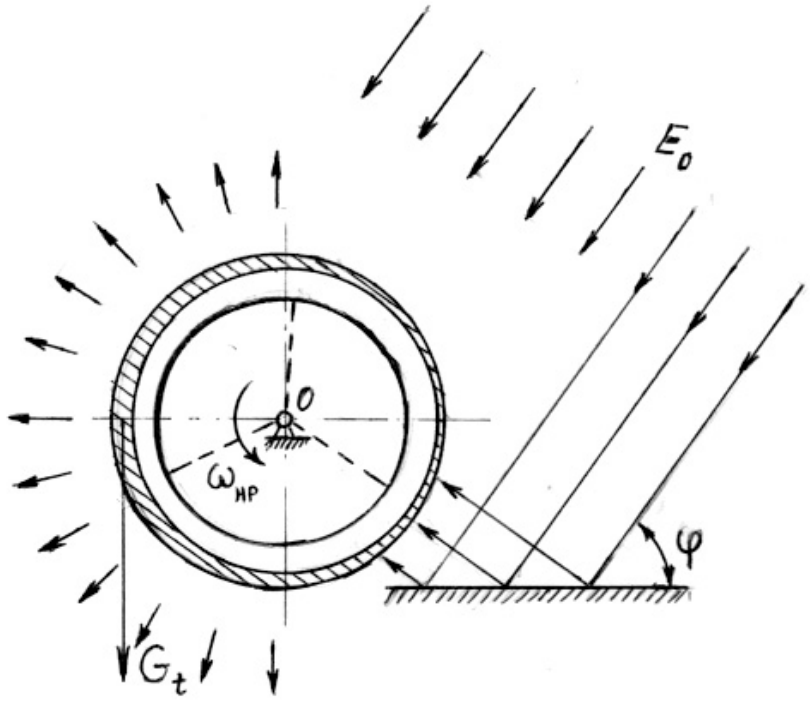

Fig. 4. Mode of heat pipe operation
(a.s. №524065, USSR)

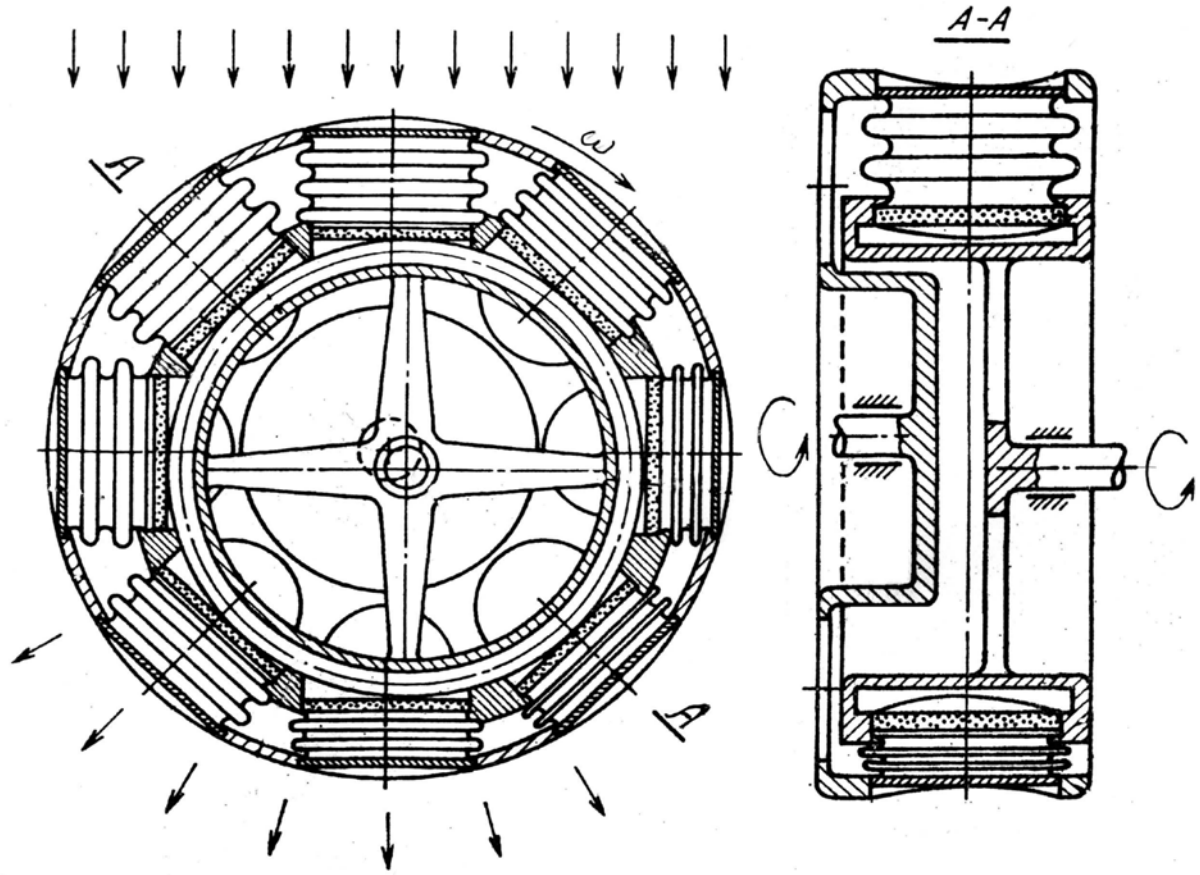

Fig. 5. Use of alternating volume radial oriented capacities

Use of alternating volume radial oriented capacities, like silphons, rigid walls of which in the form of capillary-porous elements are moistened by the volatile thermofor and eccentric fixed manacle rings agent, mechanically connected with correspondingly opposite same walls of radial oriented capacities, leads to torque making by capillary forces resultant on eccentric manacle rings rotation axles during the thermofor vaporization from the capacities, situated in the power-supply zone. Novelty of such mode of heat pipe operation is protected by patent RF # 2027898.

On the basis of given heat pipe we developed adjustable heat pipe in which eccentricity quantity and course automatically keep tracking all the changes of solar radiation flow intensity and directions.

Obtained, more effective, solar heat-engine following the azimuth movement of the Sun and automatically reformative torque when solar radiation energies changes can be used for the driving gear of peristaltic and other like pumps. With the help of the last you can raise water-level in the potential energy storage systems for the plant watering during the arid time of the year and in another hydraulic works of agrarian department, for example in the fish incubation department.